zest®

Assembly Instructions

Miami 2 Seater Swing

Code: 00496

V20 10 24

(W x D x H): 1.89m x 1.62m x 1.80m

ONLINE ASSEMBLY VIDEO AVAILABLE

Please scan the QR code or visit zestoutdoorlivingsupport.co.uk/assembly-search/

PLEASE KEEP THESE INSTRUCTIONS

Every Zest product is unique because each piece of timber has its own distinctive, natural features

zest

Zest is a leading timber specialist, designing and manufacturing award winning wooden garden products, crafted from natural slow-grown European redwood. Unlike man-made materials, timber is an entirely natural material, and each piece has its own distinctive qualities. So, owning a Zest timber product is like enjoying a unique slice of nature.

The benefits of slow grown timber:

> "Trees grow slowly in the cold climate of Eastern Europe producing stronger and close grained timber ideal for making quality outdoor products."

Natural and Unique

There may be variations in the timber's colour or shading, but these will fade away over time when exposed to sunlight.

The changing seasons in each year of growth create characteristics unique to each tree - and to every piece of timber. Branches create an embedded mark in the tree trunk, resulting in a knot. Knots are a unique and natural feature which tells the story of the tree.

Owing to timber's natural moisture content, variations in temperature and humidity can cause expansion and contraction and may result in cracks and splits in any product made from natural timber. Any cracks and splits in the timber grain will alter with the changing seasons. They do not compromise the strength and durability of the product - they just add to its unique character.

Most Zest products are pressure treated which protects the timber from rot for many years. Pressure treatment can result in a small amount of 'green spotting' on the surface of new timber caused by natural salts leaving the wood. This will fade away over time.

These visible changes are not a fault or a cause for concern and do not affect the structural integrity of the product. They are a result of how the timber matures and responds to its natural environment.

Ethically Sourced

Zest's slow grown European redwood is sourced from responsibly managed PEFC certified forests. This means forests are used in a way that maintains biodiversity, regeneration, and nature conservation. PEFC tracks certified timber from the forest to the final product giving complete confidence to the customer. **www.pefc.co.uk**

PEFC
PEFC/16-37-1490

Replanting

Zest with its main supply partners is dedicated to replanting woodland and is collaborating on the nurture of wildlife habitats.

Advisory Notices

- Roofs are weather resistant and not guaranteed to be watertight unless otherwise stated.
- Items with enclosed storage or cupboard space are weather resistant and are not watertight unless otherwise stated.
- Be aware of trap hazards if a Zest product has moving parts.
- All products should be positioned on solid, level ground
- Anchor down products where applicable using appropriate fixings.
- Roofs are not weight bearing
- Sanitise all catering surfaces prior to use.

Miami 2 Seater Swing Assembly Instructions

Requires 2 person assembly

Tools required: 13mm & 19mm Sockets & Ratchet, Corded/ Cordless Drill as all screw holes need to be pre-drilled, *Pozi-drive Bit (*Crosshead), Pozi-drive Screwdriver, Mallet.

Please take a few moments to check all pack contents listed

Miami 2 Seater Swing Pack List			
Code	**Item**	**Description**	**Quantity**
27571	A	Legs	4
09190	B	Beam	1
09191	C	Horizontal Short Brace	2
09192	D	Horizontal Long Brace	2
09193	E	Diagonal Brace	2
09194	F	Seat Back	1
09195	G	Seat	1
09196	H	Armrest Support	2
09197	J1	Arm Rest Right	1
09198	J2	Arm Rest Left	1
09199	K	Shelf	2
09201	L	Slat Supports	2
09200	M	Canopy Slats	16
09202	N	Centre Batons	1

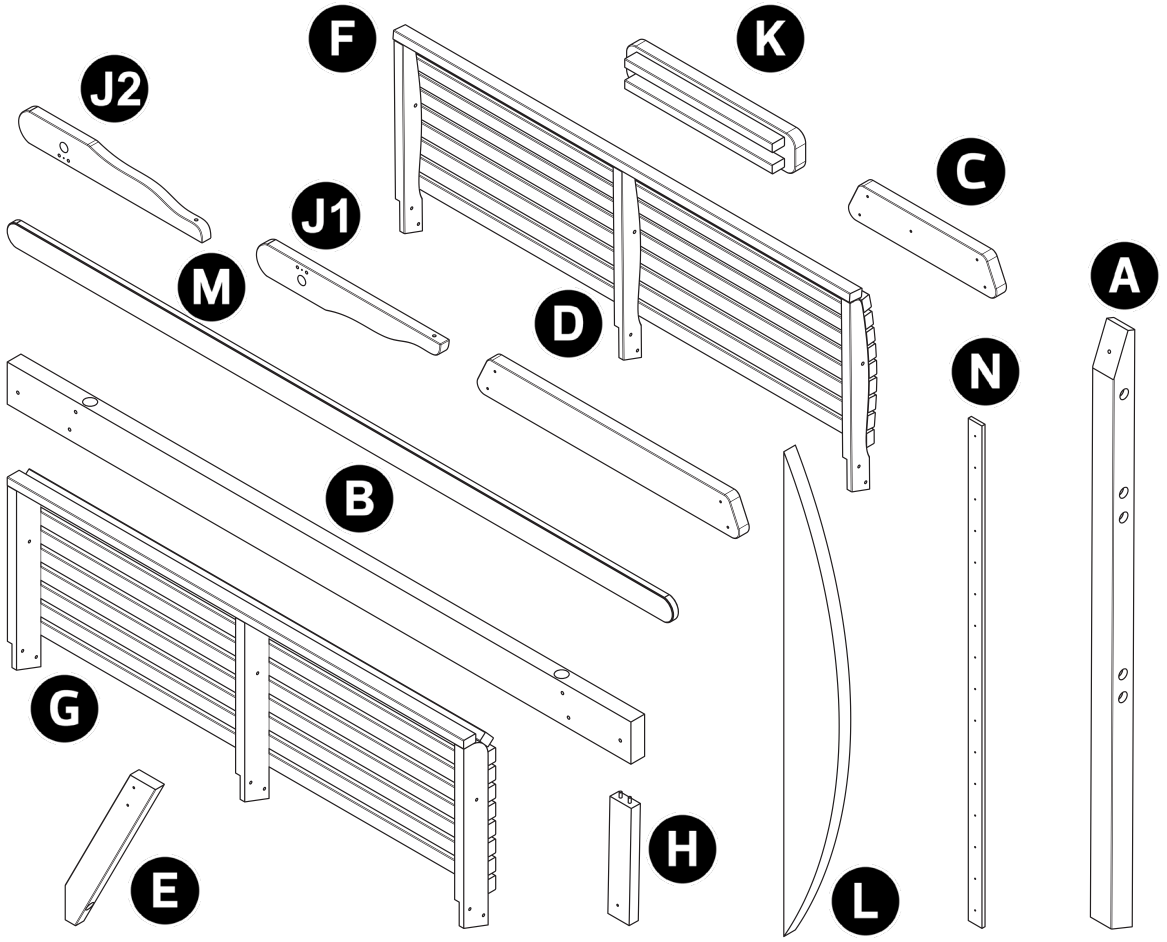

This product is made from pressure-treated timber. It should not be painted or coated with any other treatment until at least 6 months after purchase

10305 - Miami 2 Seater Fixings List		
Item	**Description**	**Quantity**
1	25mm Screws	16
2	35mm Screws	4
3	60mm Screws	30
4	100mm Screws	2
5	45mm Bolt	6
6	80mm Bolt	2
7	90mm Bolt	4
8	100mm Bolt	18
9	140mm Bolt	2
10	115mm Eye Bolt, Washers and Nut	2
11	Long Chain	2
12	Short Chain	2
13	Small Karabiner	4
14	Washer	32
15	Nut	32
16	Plastic Cap	4
17	150mm Eye Bolt,Large Karabiner, Small Karabiner, Washers & Nuts	2
18	140mm Eye Bolt, Washers & Nut	2

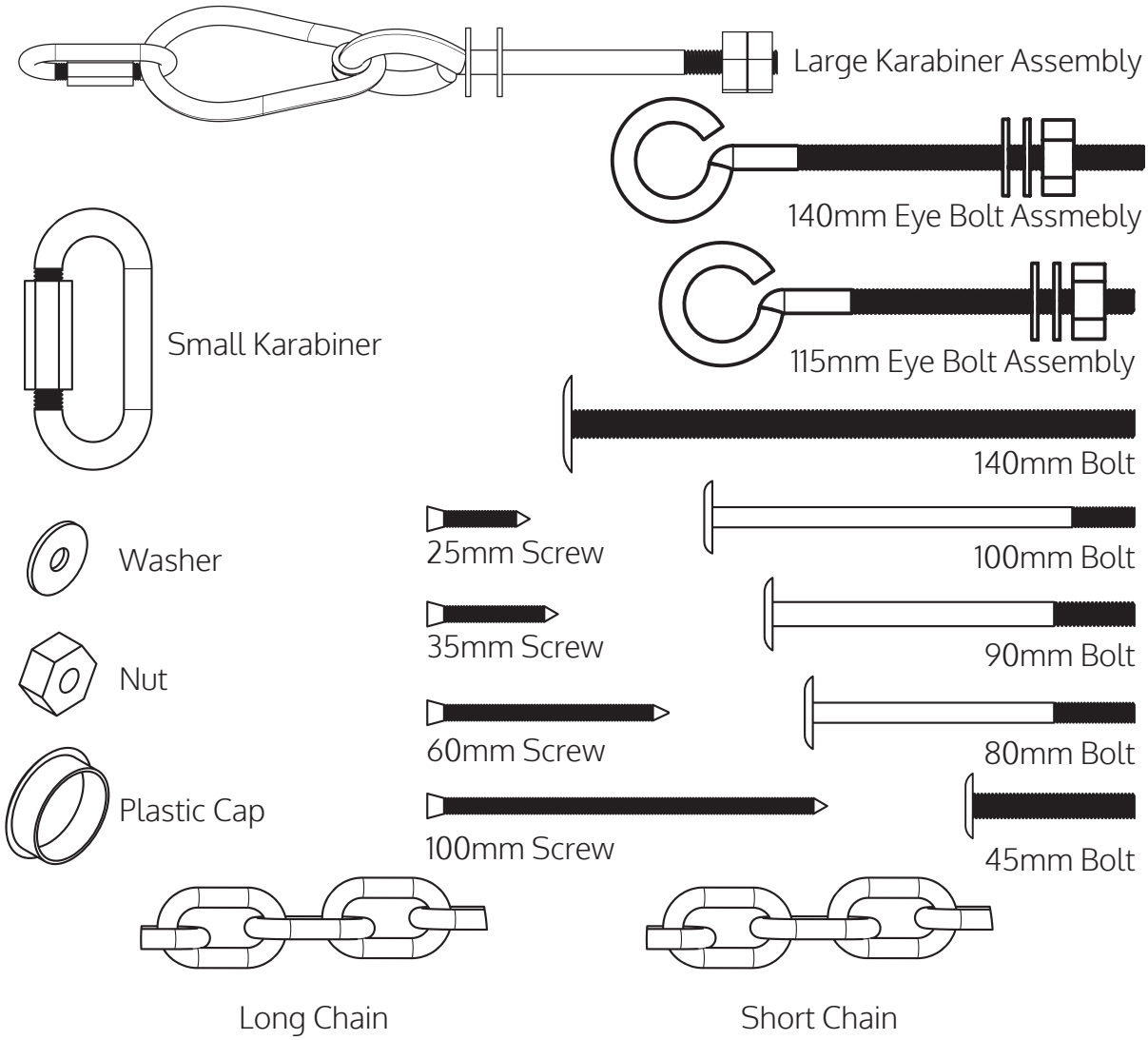

This product is made from pressure-treated timber. It should not be painted or coated with any other treatment until at least 6 months after purchase

1

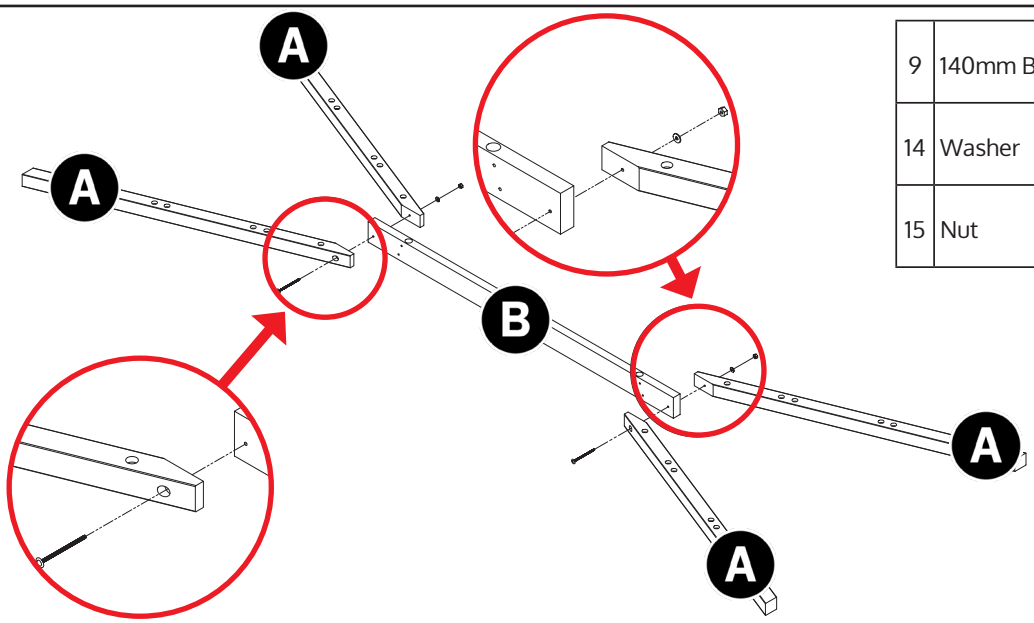

9	140mm Bolt	x2
14	Washer	x2
15	Nut	x2

Do Not Fully Tighten at This Stage

2

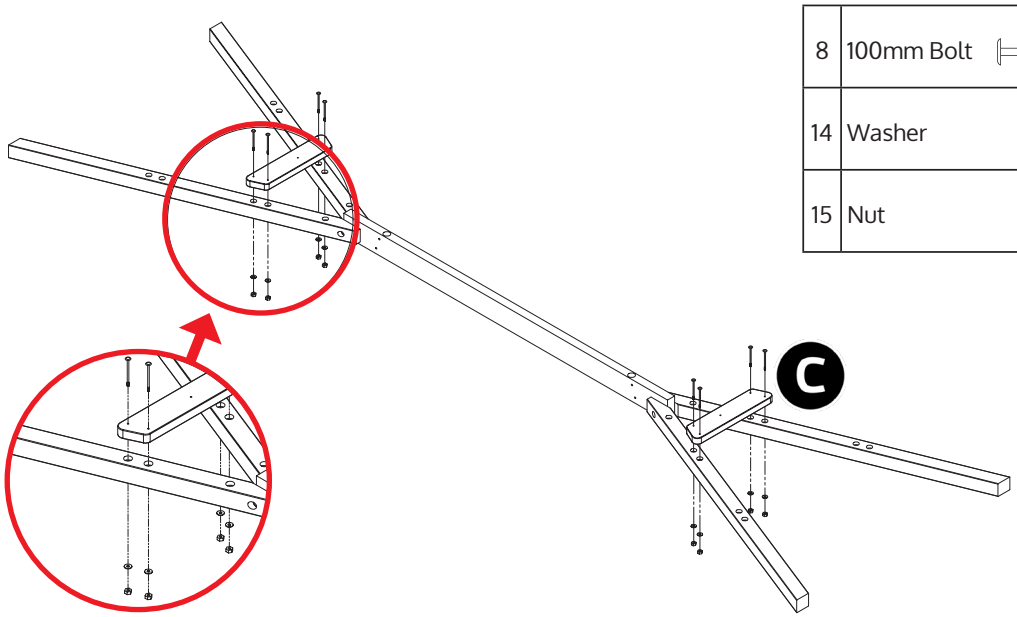

8	100mm Bolt	x8
14	Washer	x8
15	Nut	x8

Do Not Fully Tighten at This Stage

3

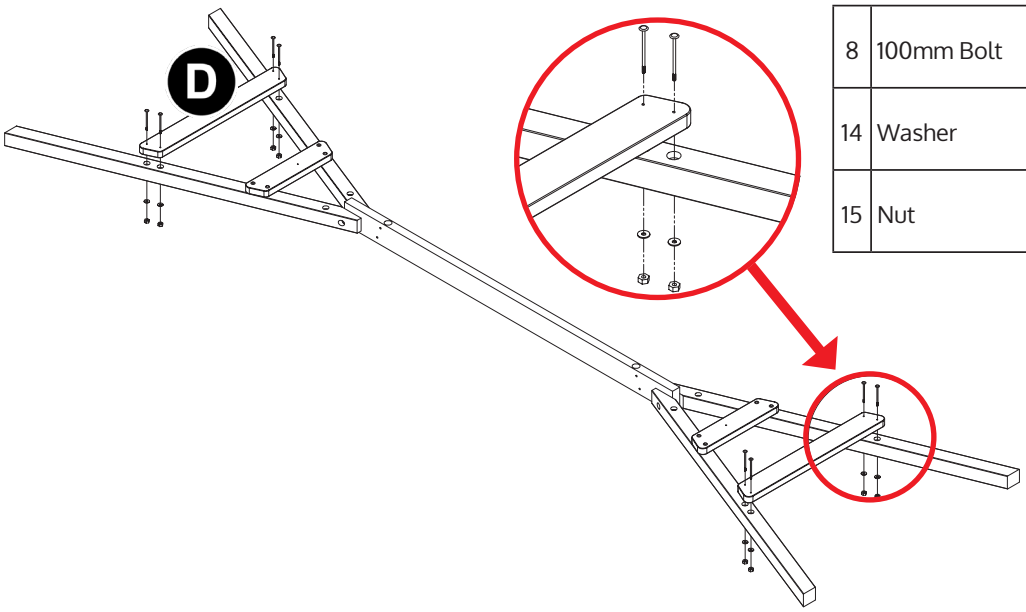

8	100mm Bolt	x8
14	Washer	x8
15	Nut	x8

Do Not Fully Tighten at This Stage

4

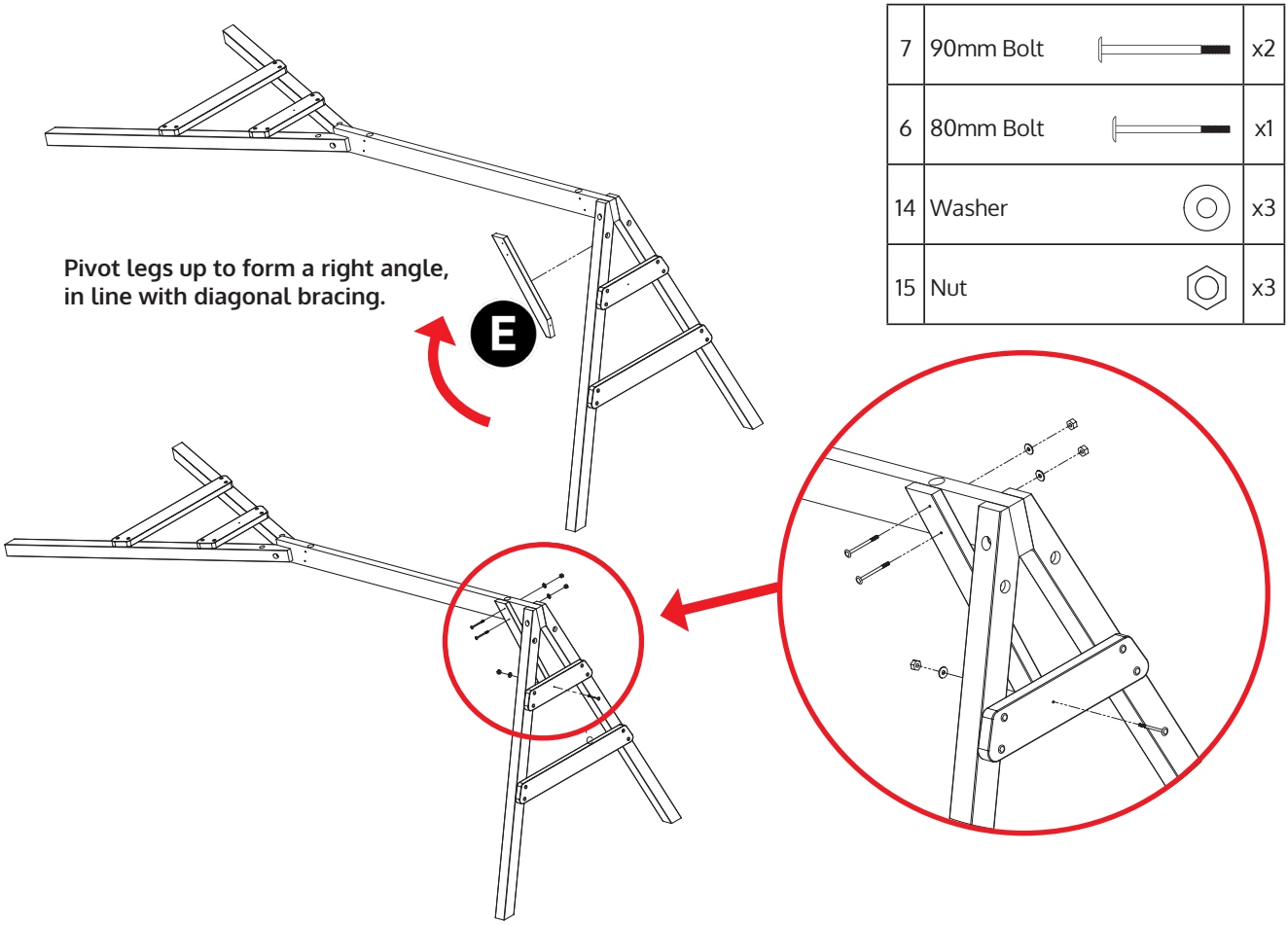

7	90mm Bolt	x2
6	80mm Bolt	x1
14	Washer	x3
15	Nut	x3

5

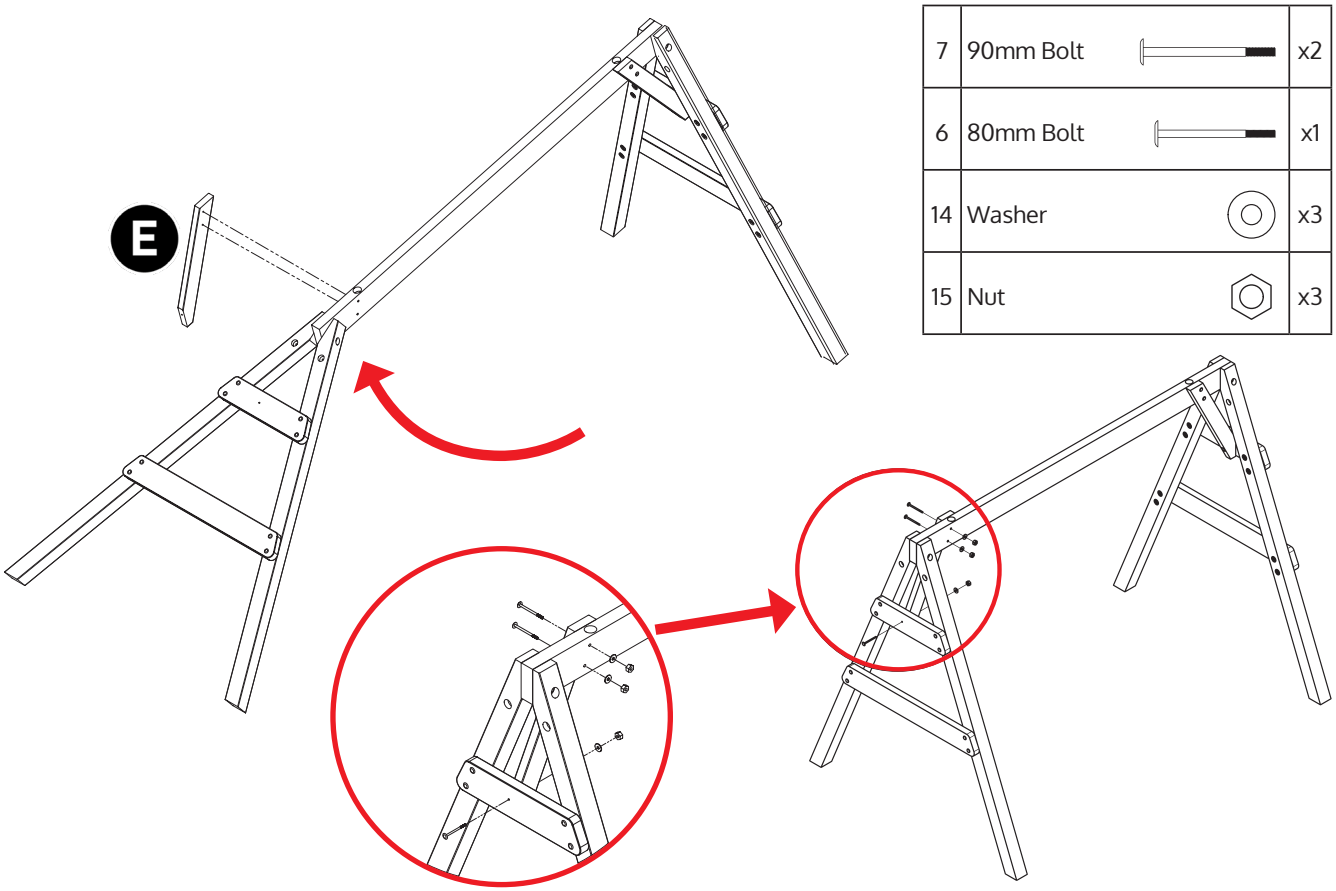

7	90mm Bolt	x2
6	80mm Bolt	x1
14	Washer	x3
15	Nut	x3

Fully Tighten All Previous Bolts at This Stage

6

17	Large Karabiner Assembly	x2

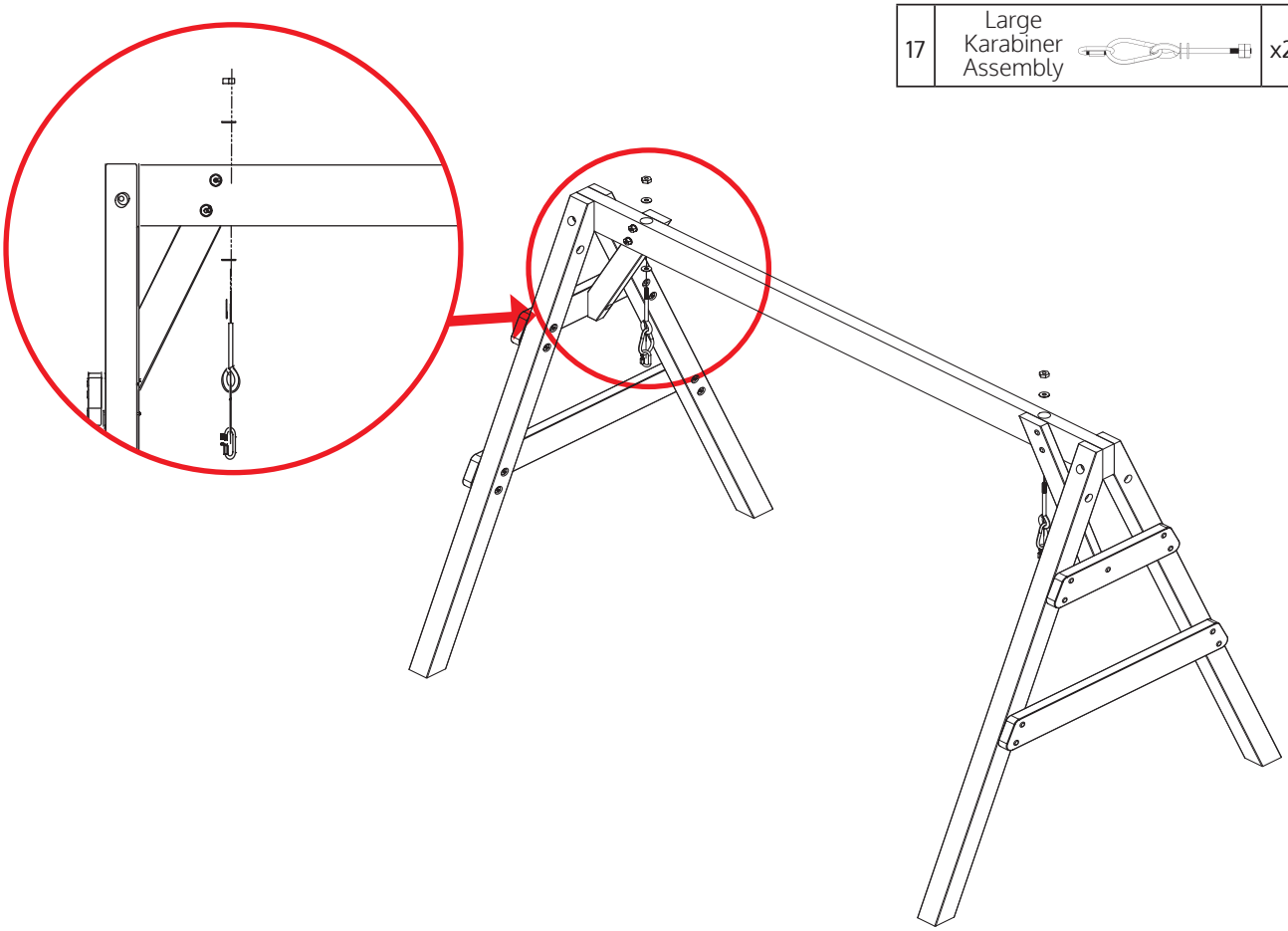

7

5	45mm Bolt	x6
14	Washer	x6
15	Nut	x6

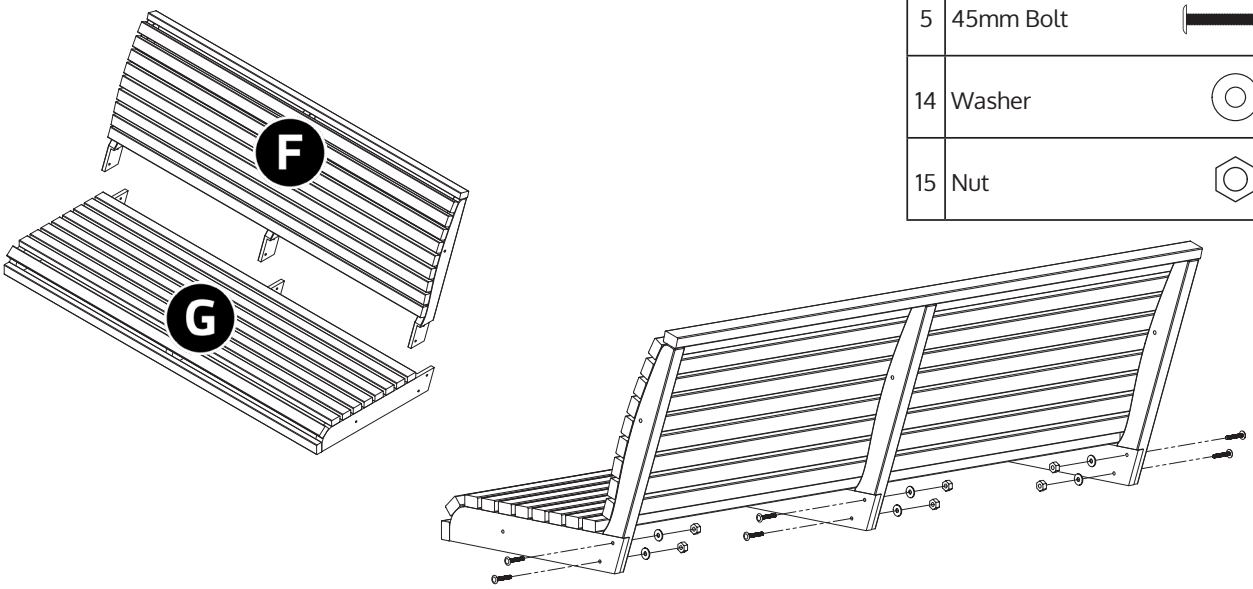

8

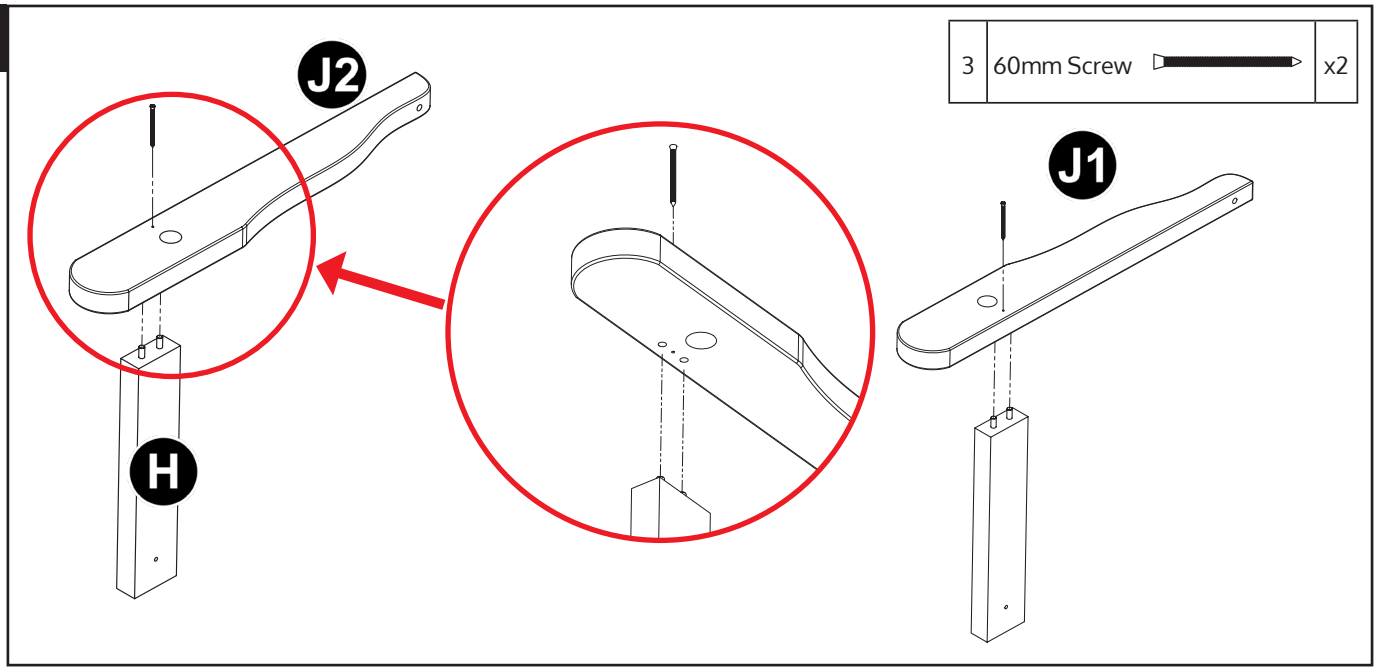

3	60mm Screw	x2

9

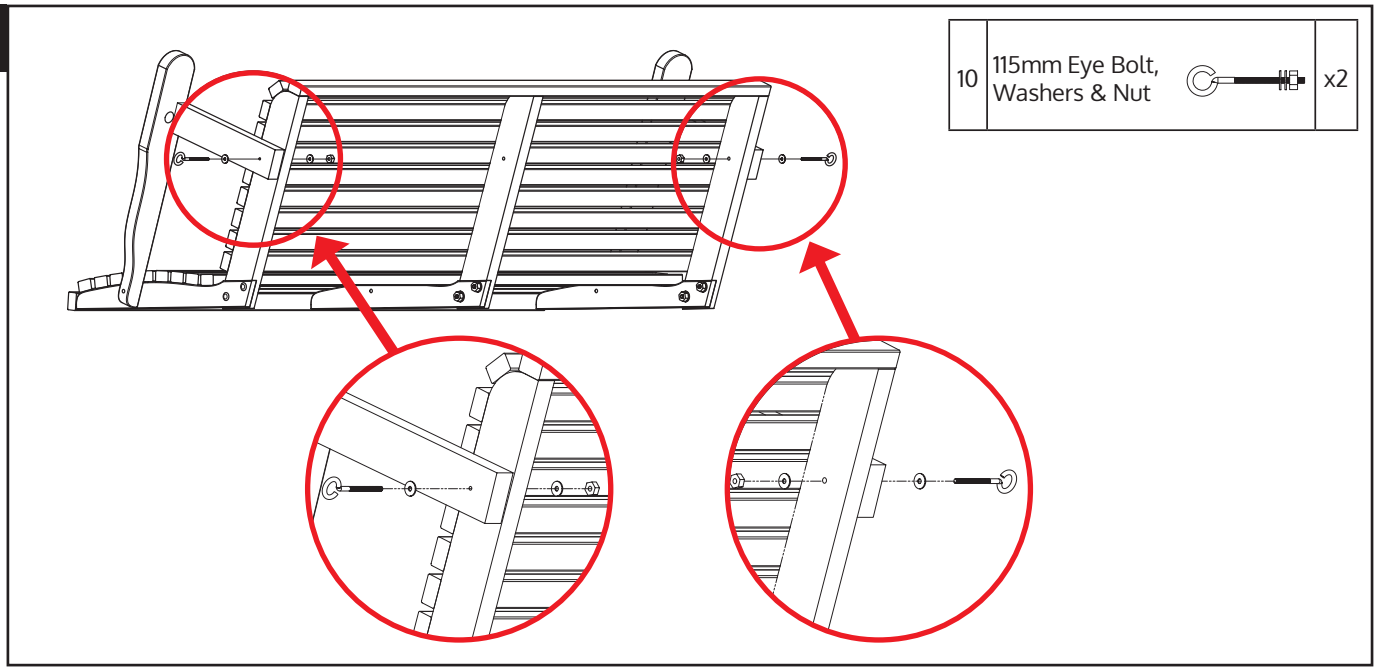

10	115mm Eye Bolt, Washers & Nut	x2

10

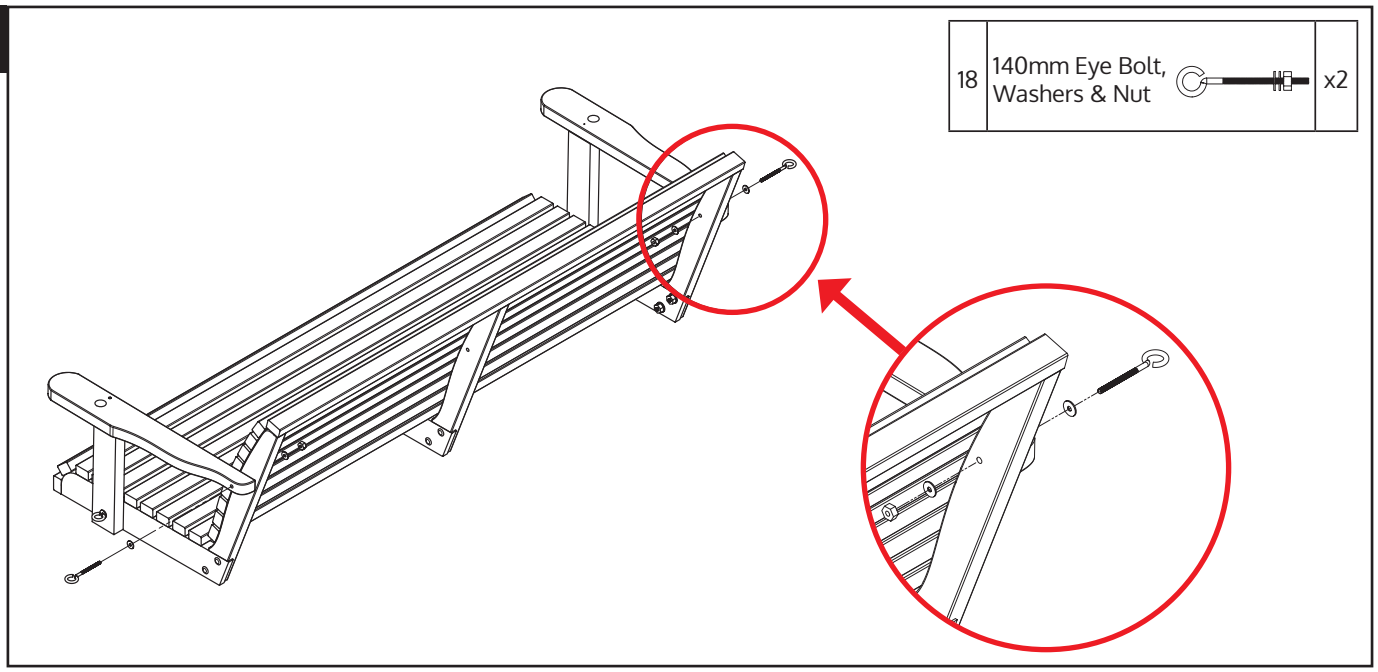

18	140mm Eye Bolt, Washers & Nut	x2

11

11	Long Chain	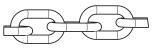	x2
12	Short Chain	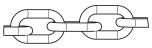	x2

Place 1 short chain on the back of the karabiner and 1 long chain towards the front (repeat on other side).

12

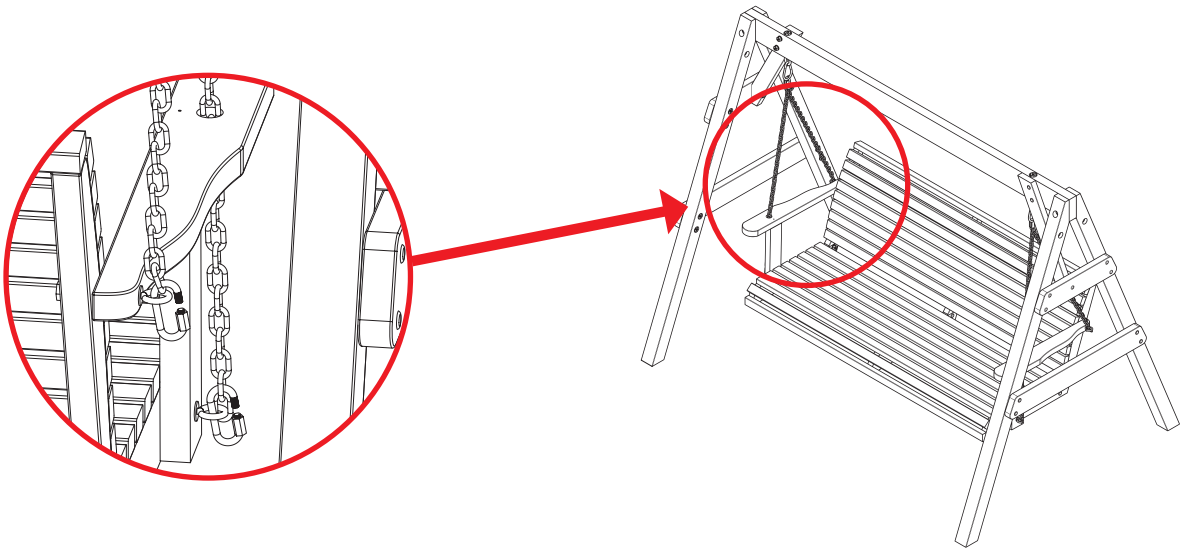

Ensure all karabiners are securely fastened.

13

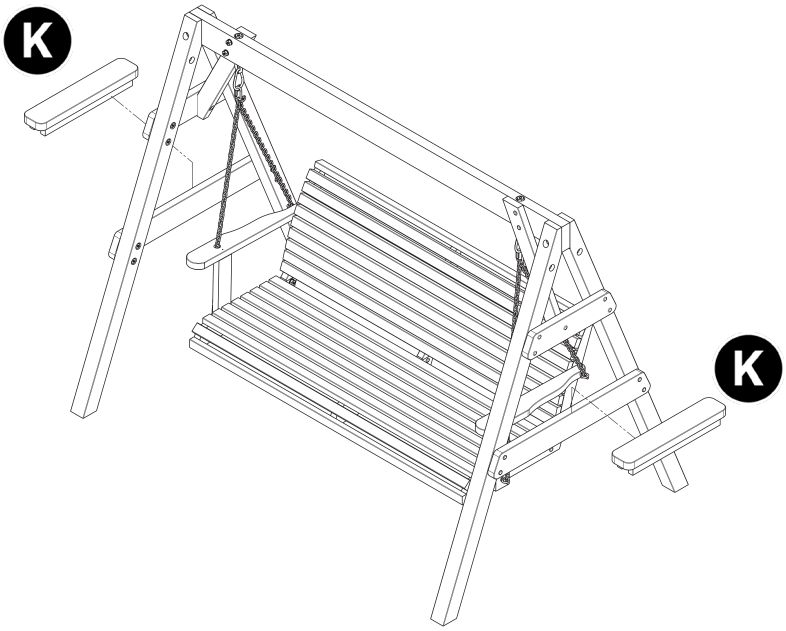

14

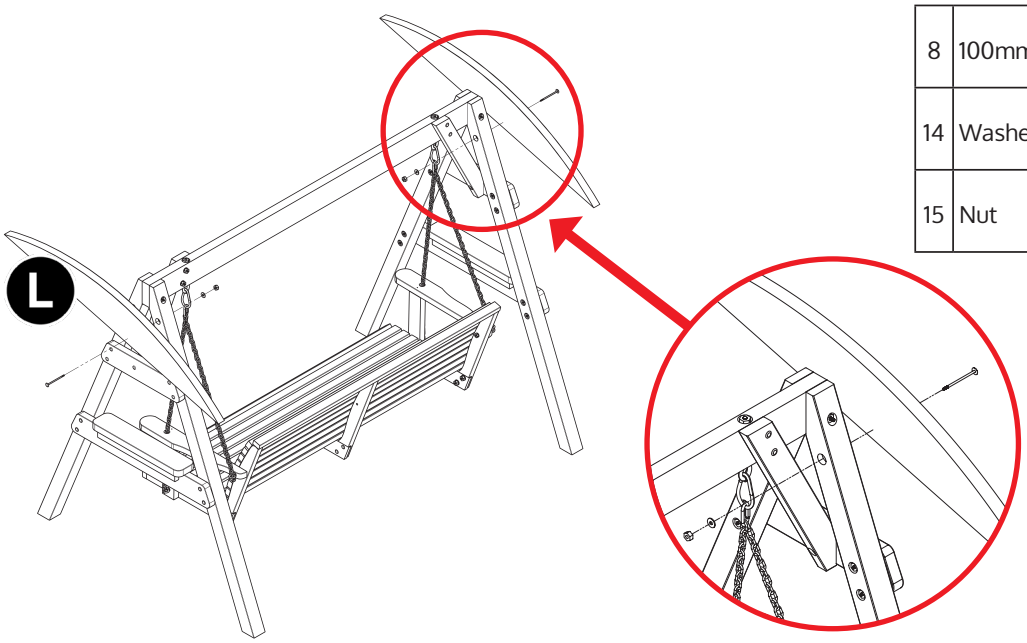

8	100mm Bolt	x2
14	Washer	x2
15	Nut	x2

15

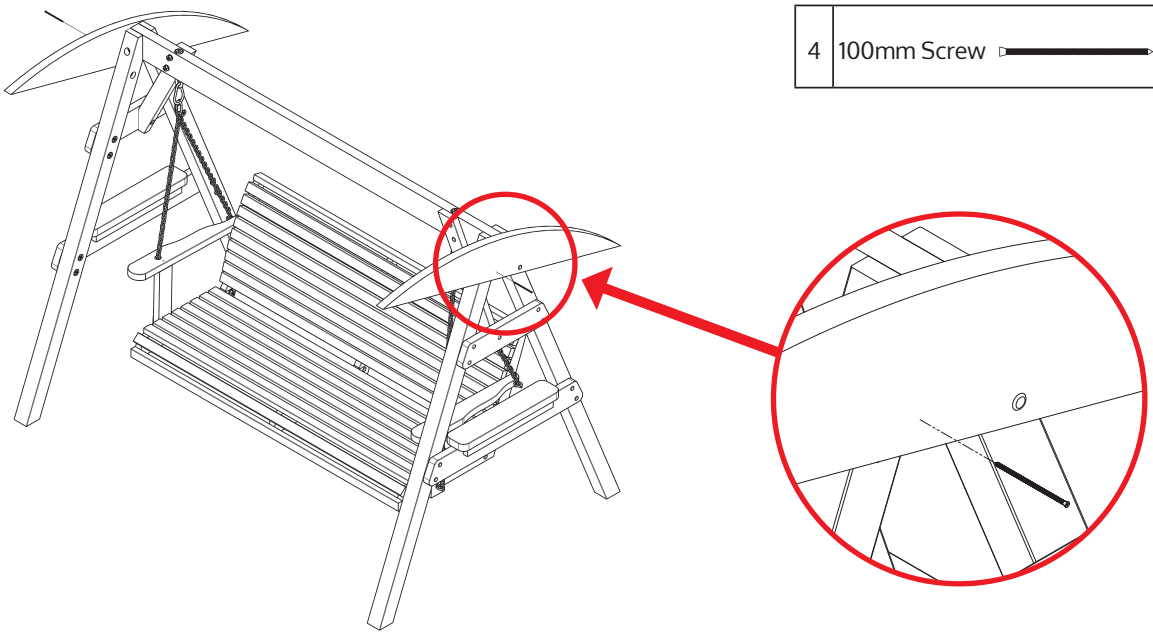

4	100mm Screw	x2

16

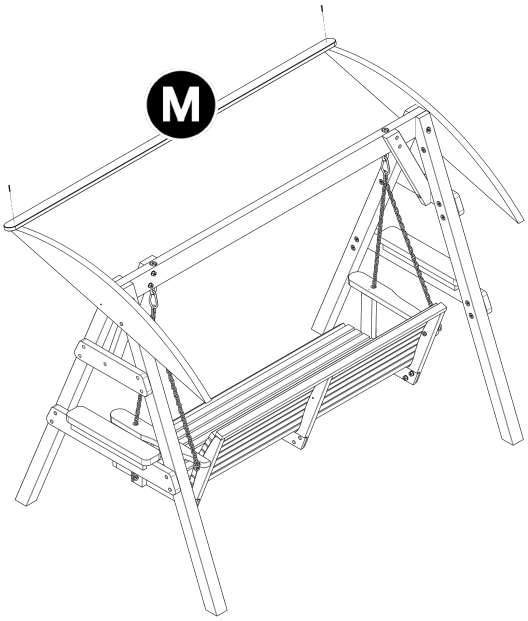

2	35mm Screw	x2

17

3	60mm Screw	x28

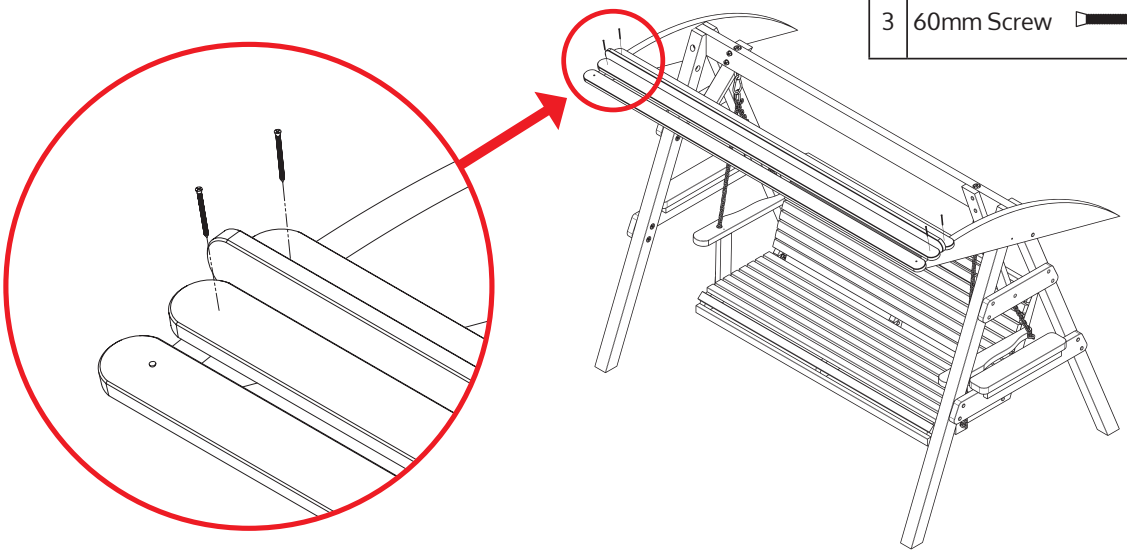

Use spare canopy slat sideways to evenly space the middle 16 panels - 2 screws per panel. Repeat this until there is one panel left.

18

2	35mm Screw	x2

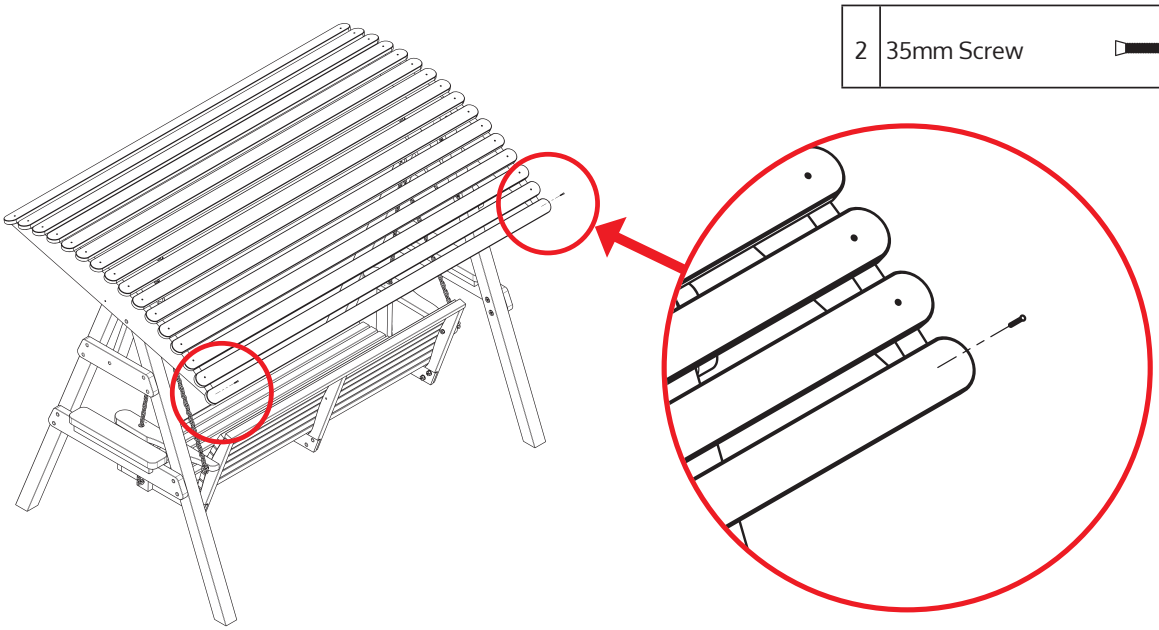

19

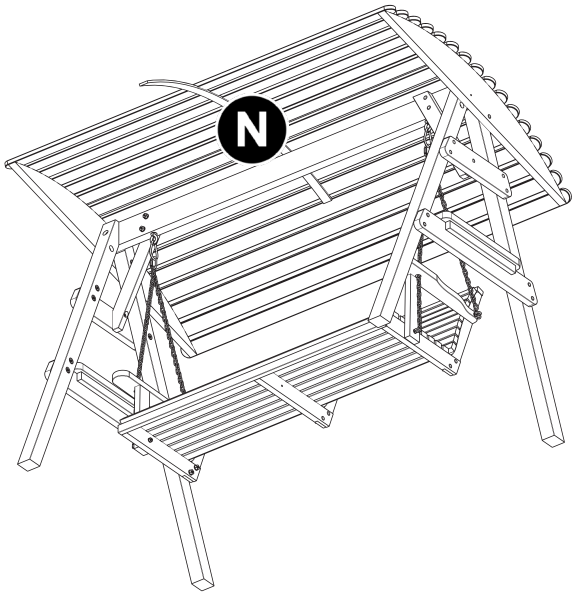

Gently bend the batten into place, along the underside of the canopy.

20

1	25mm Screw	x16

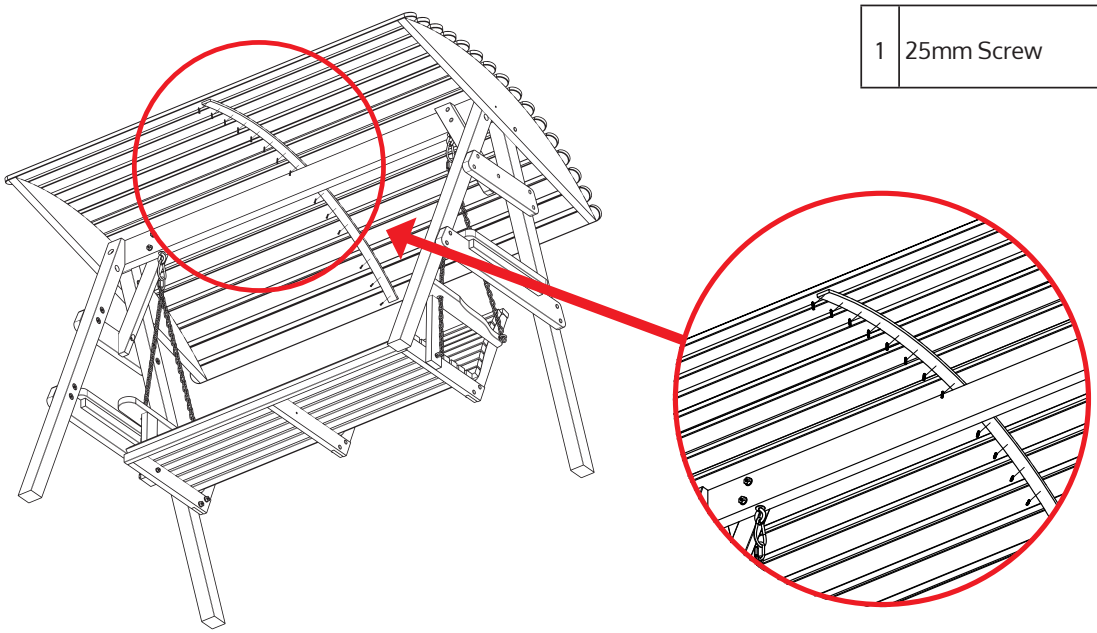

21

16	Plastic Cap	x4

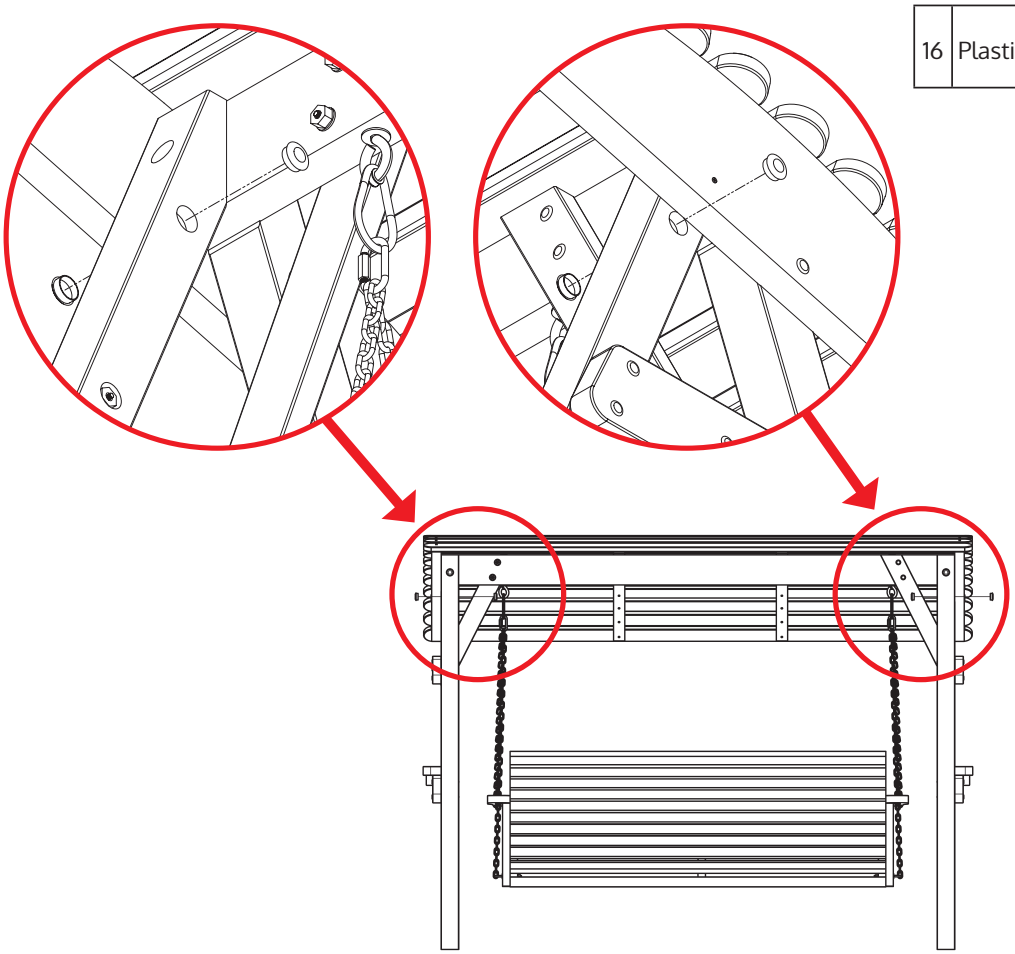

22

Your Miami 2 Seater Swing is now complete.