zest®

Assembly Instructions
Garden Bar

Code: 31304

V2 05 24

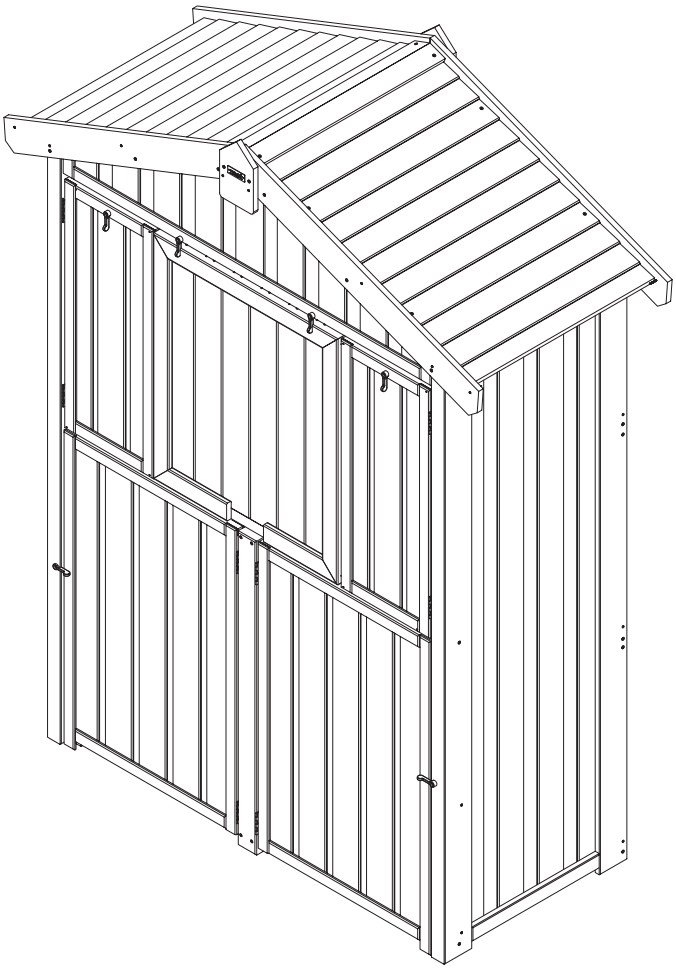

(W x D x H) 1.54m x 0.67m x 2.05m

ONLINE ASSEMBLY VIDEO AVAILABLE

Please scan the QR code or visit zestoutdoorliving.co.uk/assembly-search

PLEASE KEEP THESE INSTRUCTIONS

Every Zest product is unique because each piece of timber has its own distinctive, natural features

Zest is a leading timber specialist, designing and manufacturing award winning wooden garden products, crafted from natural slow-grown European redwood. Unlike man-made materials, timber is an entirely natural material, and each piece has its own distinctive qualities. So, owning a Zest timber product is like enjoying a unique slice of nature.

The benefits of slow grown timber:

> "Trees grow slowly in the cold climate of Eastern Europe producing stronger and close grained timber ideal for making quality outdoor products."

Natural and Unique

There may be variations in the timber's colour or shading, but these will fade away over time when exposed to sunlight.

The changing seasons in each year of growth create characteristics unique to each tree - and to every piece of timber. Branches create an embedded mark in the tree trunk, resulting in a knot. Knots are a unique and natural feature which tells the story of the tree.

Owing to timber's natural moisture content, variations in temperature and humidity can cause expansion and contraction and may result in cracks and splits in any product made from natural timber. Any cracks and splits in the timber grain will alter with the changing seasons. They do not compromise the strength and durability of the product - they just add to its unique character.

Most Zest products are pressure treated which protects the timber from rot for many years. Pressure treatment can result in a small amount of 'green spotting' on the surface of new timber caused by natural salts leaving the wood. This will fade away over time.

These visible changes are not a fault or a cause for concern and do not affect the structural integrity of the product. They are a result of how the timber matures and responds to its natural environment.

Ethically Sourced

Zest's slow grown European redwood is sourced from responsibly managed PEFC certified forests. This means forests are used in a way that maintains biodiversity, regeneration, and nature conservation. PEFC tracks certified timber from the forest to the final product giving complete confidence to the customer. **www.pefc.co.uk**

PEFC
PEFC/16-37-1490

Replanting

Zest with its main supply partners is dedicated to replanting woodland and is collaborating on the nurture of wildlife habitats.

Advisory Notices

- Roofs are weather resistant and not guaranteed to be watertight unless otherwise stated.
- Items with enclosed storage or cupboard space are weather resistant and are not watertight unless otherwise stated.
- Be aware of trap hazards if a Zest product has moving parts.
- All products should be positioned on solid, level ground
- Anchor down products where applicable using appropriate fixings.
- Roofs are not weight bearing
- Sanitise all catering surfaces prior to use.

Product Assembly Instructions

Requires 2 Person assembly
Tools required: Corded / Cordless Drill, Pozi-drive Bit / Screwdriver,
3mm & 4mm Drill Bit required in order for you to drill all screw holes before construction.

We advise the product is situated on firm level ground and anchored to the ground or wall with suitable fixings (not supplied).

Please take a few moments to check all pack contents listed

Garden Bar Pack List			
Part Code	**Item**	**Description**	**Quantity**
35429	A	Side Panel	2
35430	B	Back Panel Large	2
35431	C	Back Panel Small	1
35432	D	Top Panel	2
35433	E	Base Panel	2
35434	F	Centre Brace	1
35435	G	Bottom Doors	2
35436	H	Shelf Sides	2
35437	J	Middle Shelf	1
35438	K	Top Shelf Assembly	1
35439	L	Small Doors	2
35440	M	Table Door	1
35441	N	Roof Panel	2
35442	P	Roof Facias	4
35443	Q	Finial	2
35444	R	Roof Cap	1

Code - 35445	Fixings List	
Item	**Description**	**Quantity**
1	30mm Screw	66
2	40mm Screw	42
3	50mm Screw	14
4	60mm Screw	4
5	70mm Screw	20
6	100mm Screw	4
7	Hinge	8
8	Piano Hinge	1
9	Plastic Lock	6

This product is made from pressure-treated timber. It should not be painted or coated with any other treatment until at least 6 months after purchase

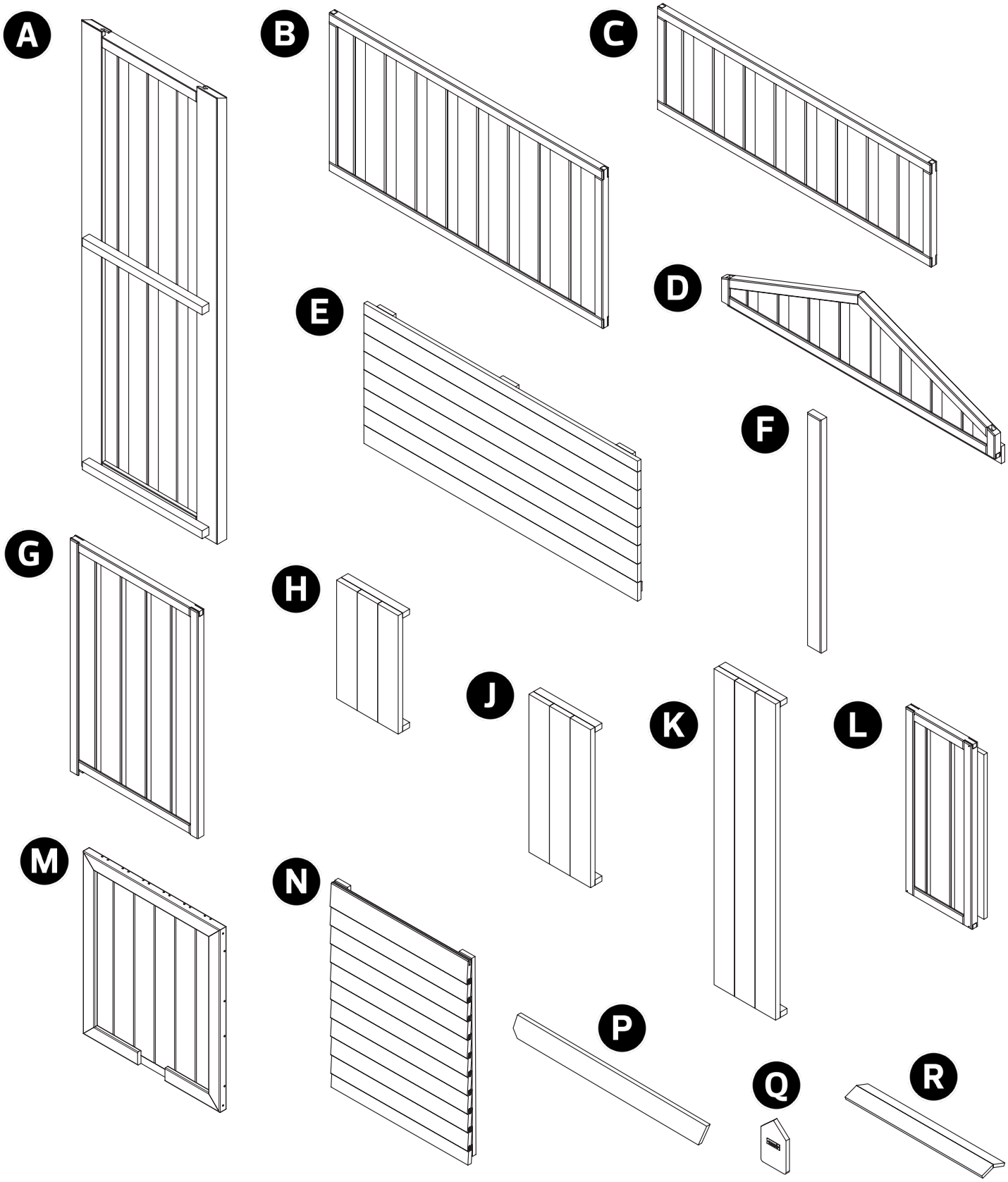

1. 30mm Screw
2. 40mm Screw
3. 50mm Screw
4. 60mm Screw
5. 70mm Screw
6. 100mm Screw
7. Hinge
8. Piano Hinge
9. Plastic Lock

1

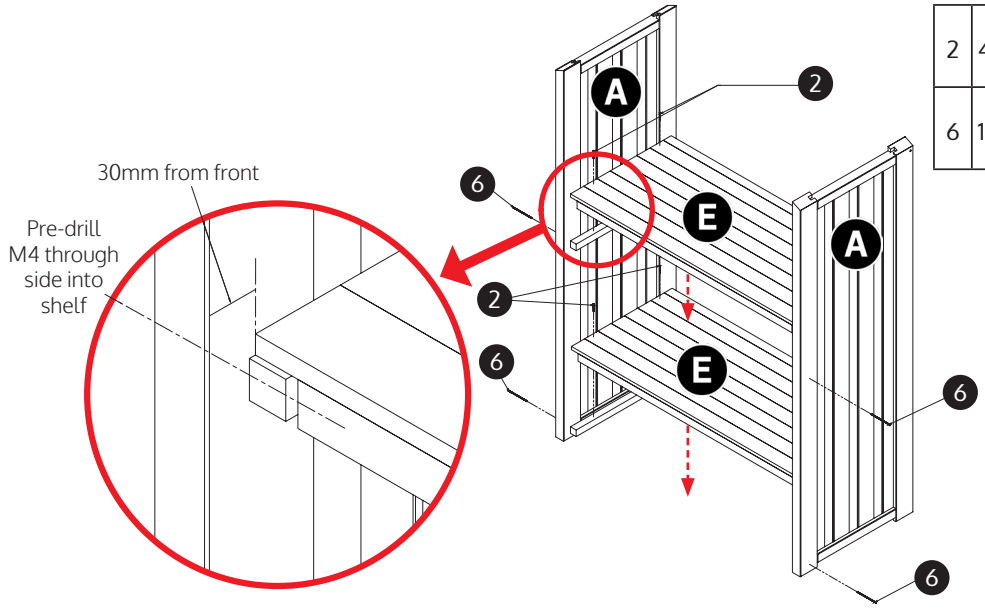

2	40mm Screw	x8
6	100mm Screw	x4

2

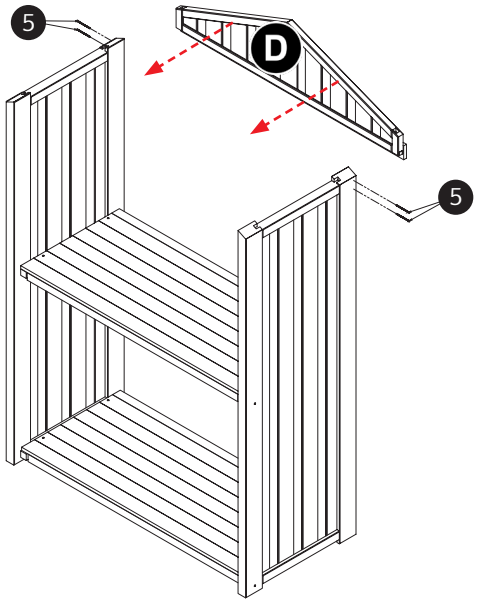

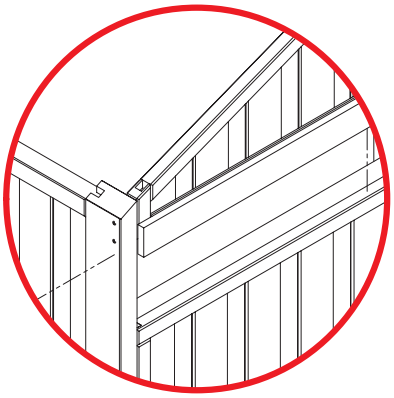

5	70mm Screw	x4

3

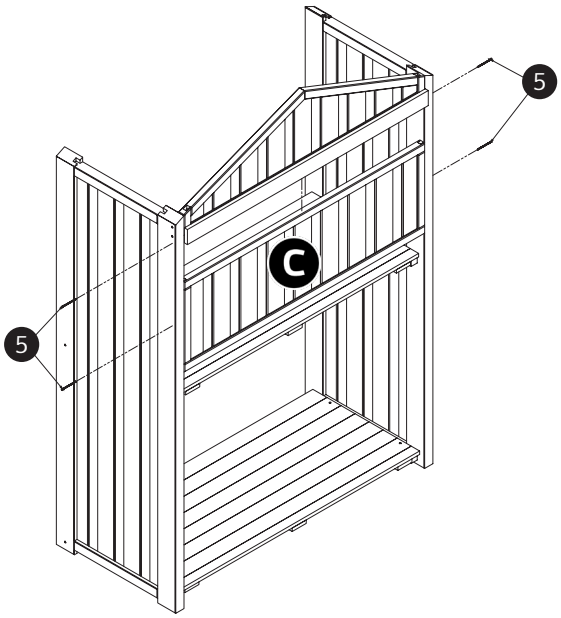

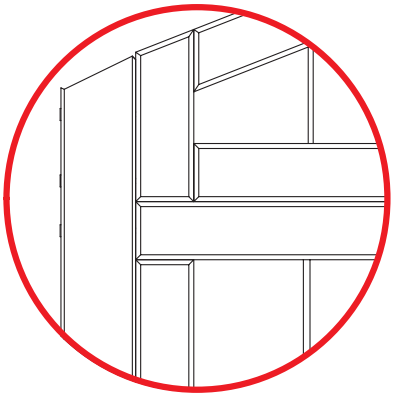

Front View

5	70mm Screw	x4

4

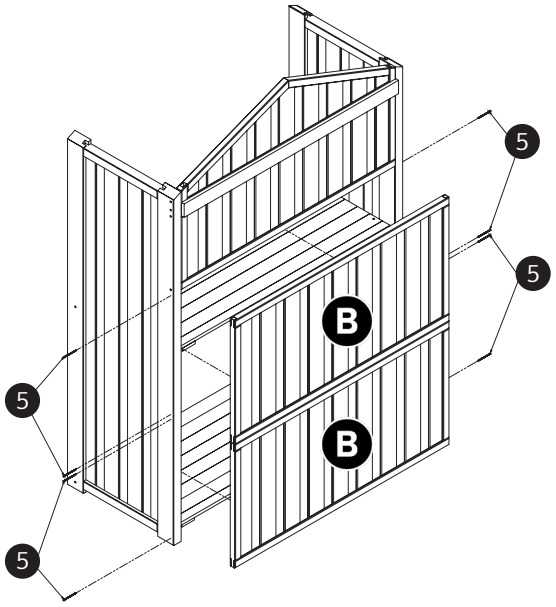

5	70mm Screw	x8

TIP: If struggling to fit Back Panels, take out rear screw in the Parts E (Step 1) to loosen back

5

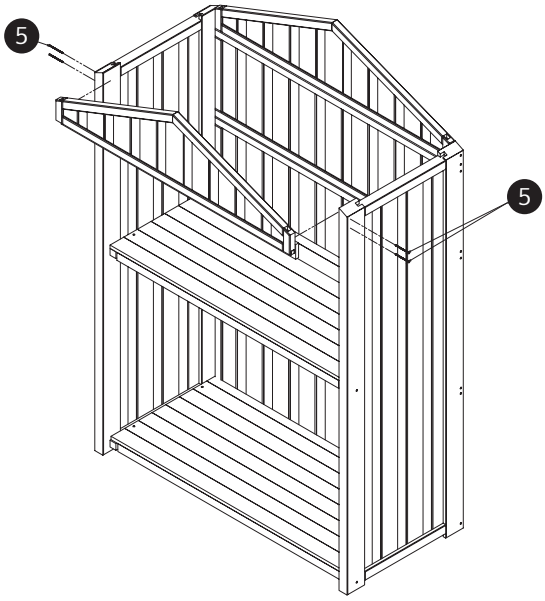

5	70mm Screw	x4

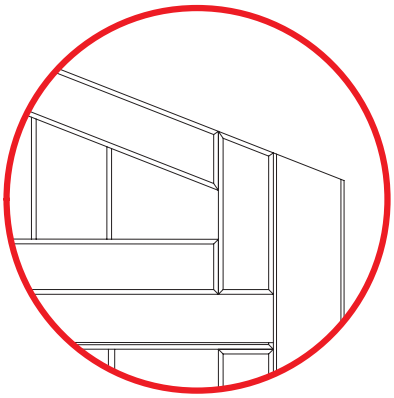

6

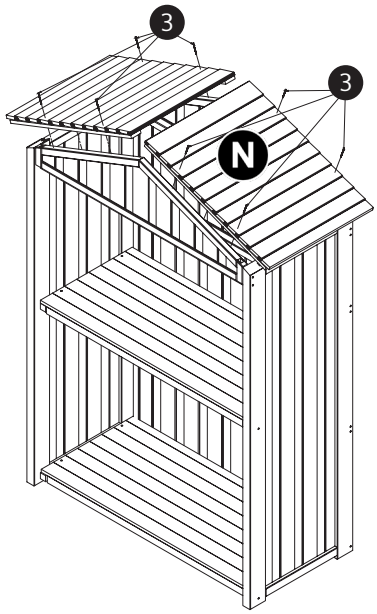

3	50mm Screw	x8

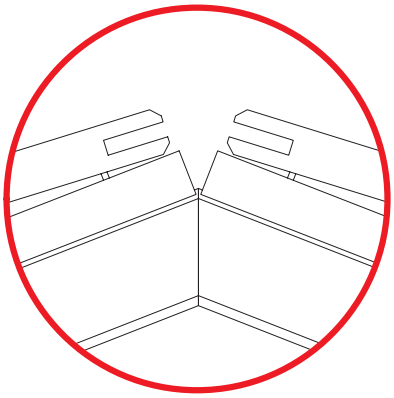

7

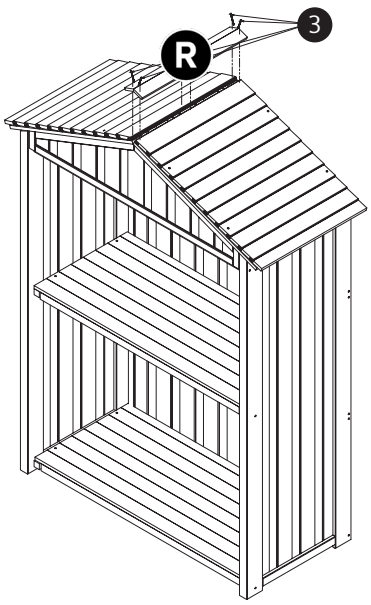

3	50mm Screw	x4

8

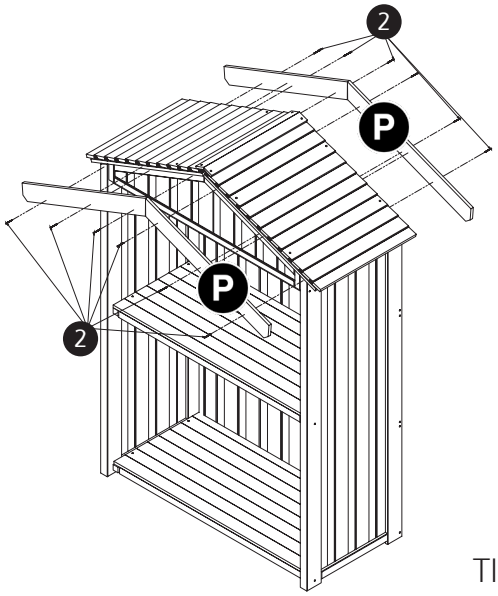

2	40mm Screw	x12

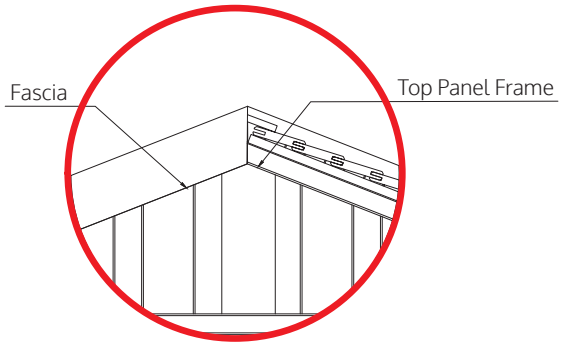

TIP: Align Fascia Board with Top Panel frame

9

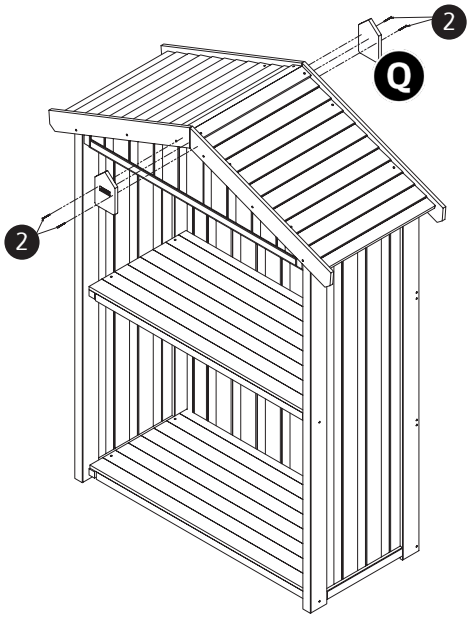

2	40mm Screw	x4

Now position the Garden Bar
into its final location

10

2	40mm Screw	x4

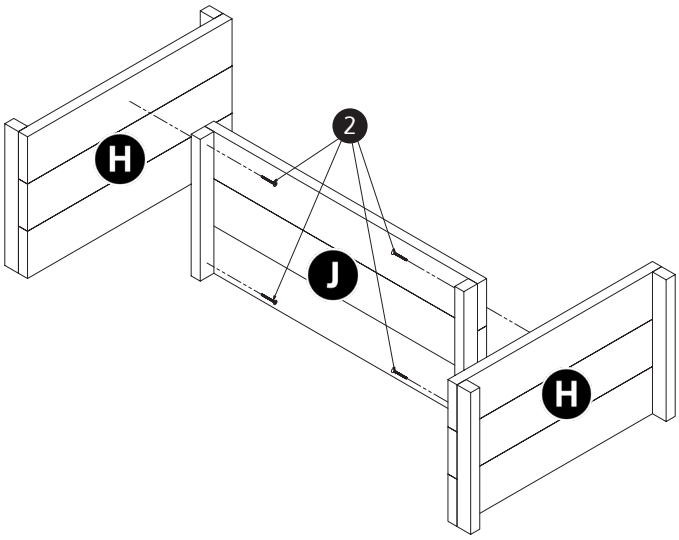

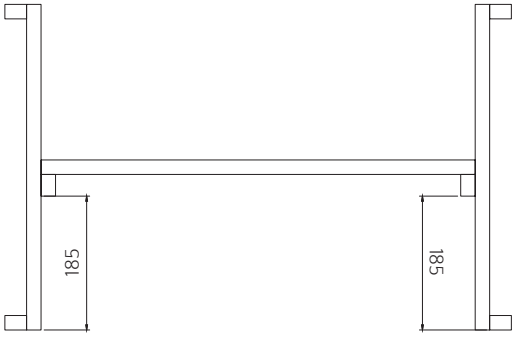

11

2	40mm Screw	x4

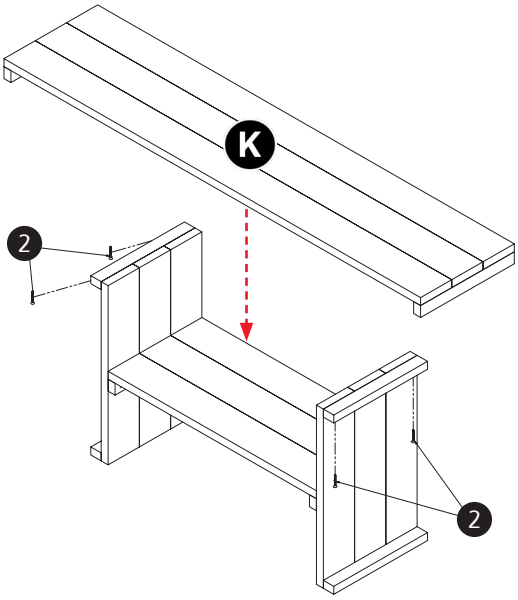

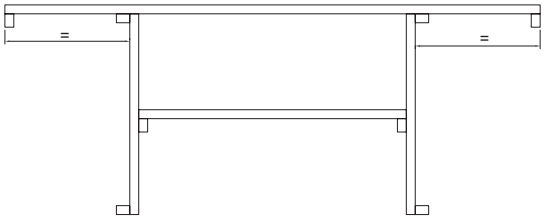

12

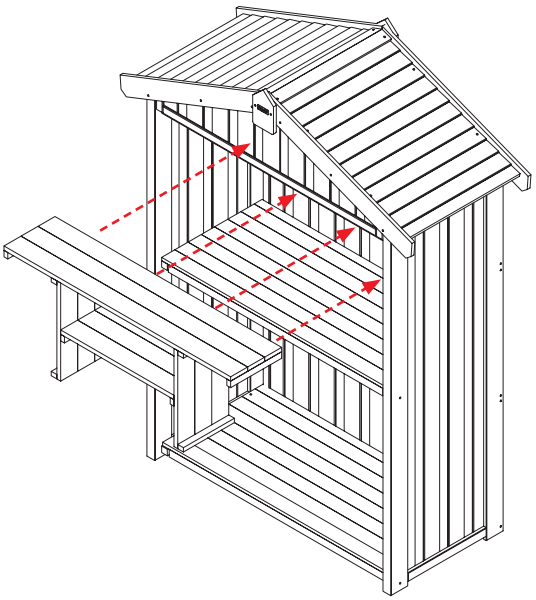

13

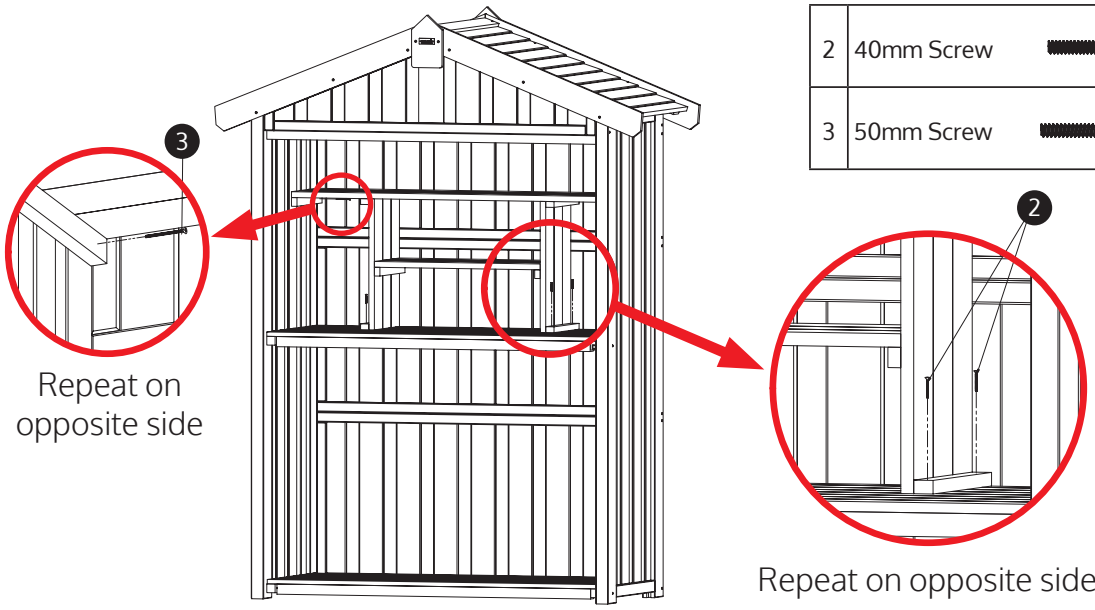

2	40mm Screw		x4
3	50mm Screw		x2

14

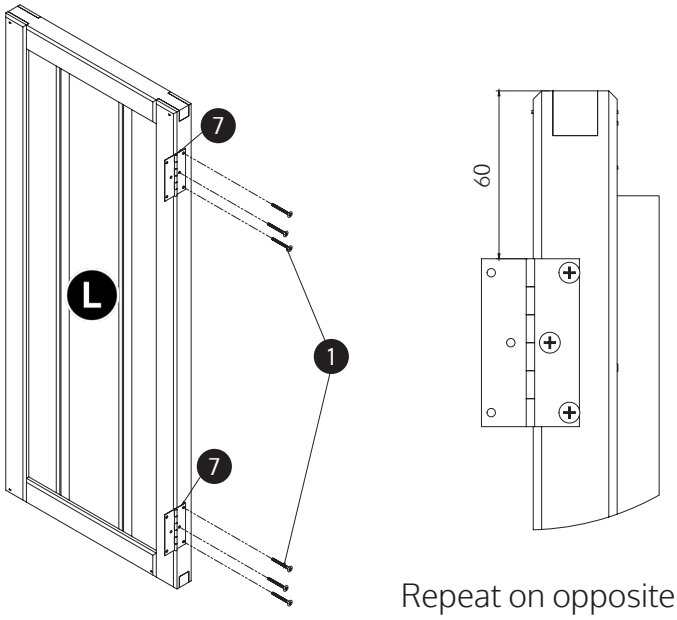

1	30mm Screw		x12
7	Hinge		x4

15

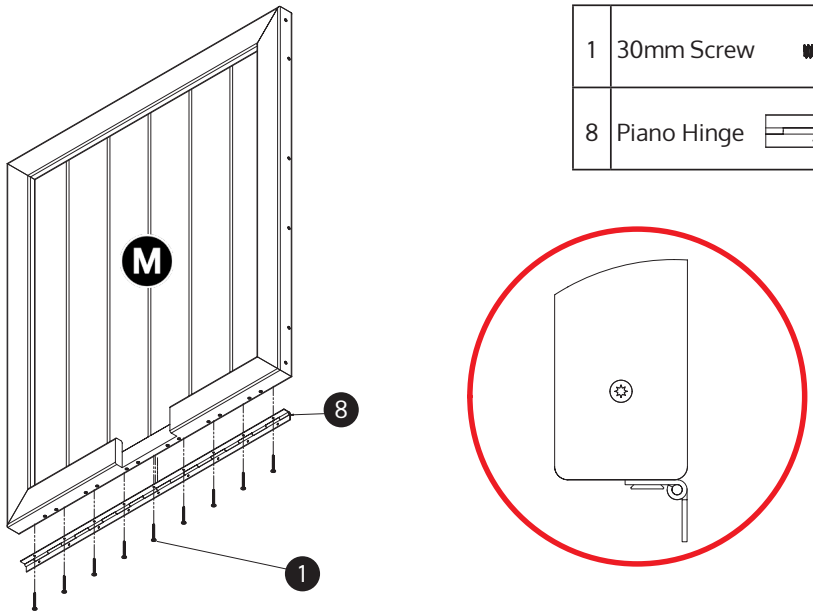

1	30mm Screw		x9
8	Piano Hinge		x1

16

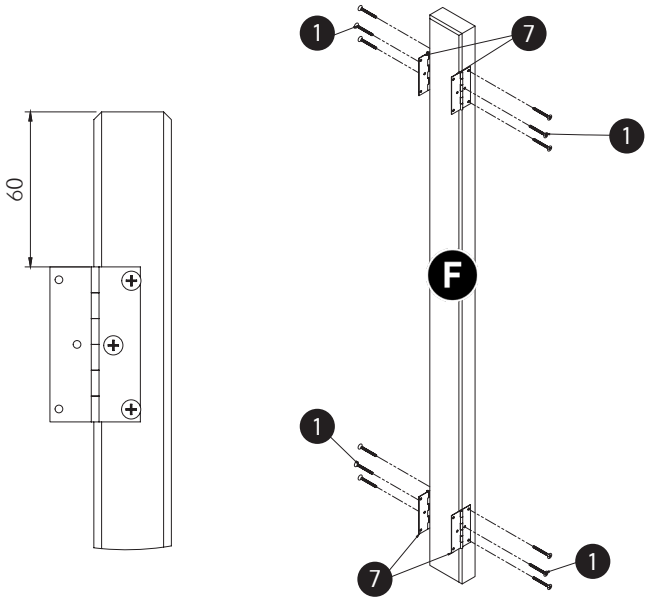

1	30mm Screw	x12
7	Hinge	x4

17

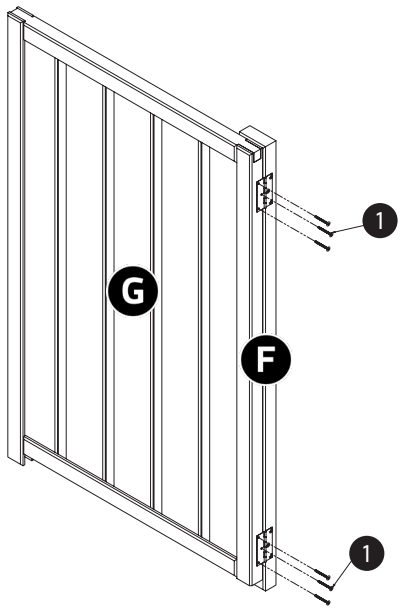

1	30mm Screw	x6

18

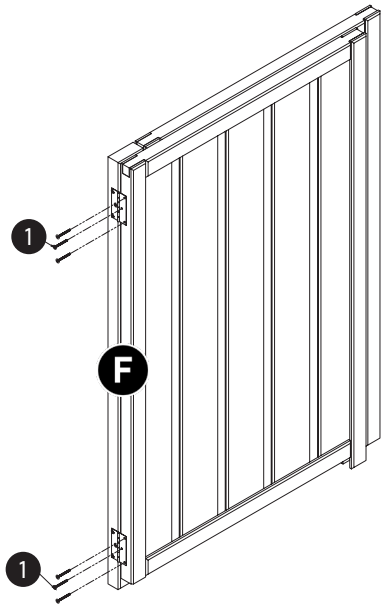

1	30mm Screw	x6

19

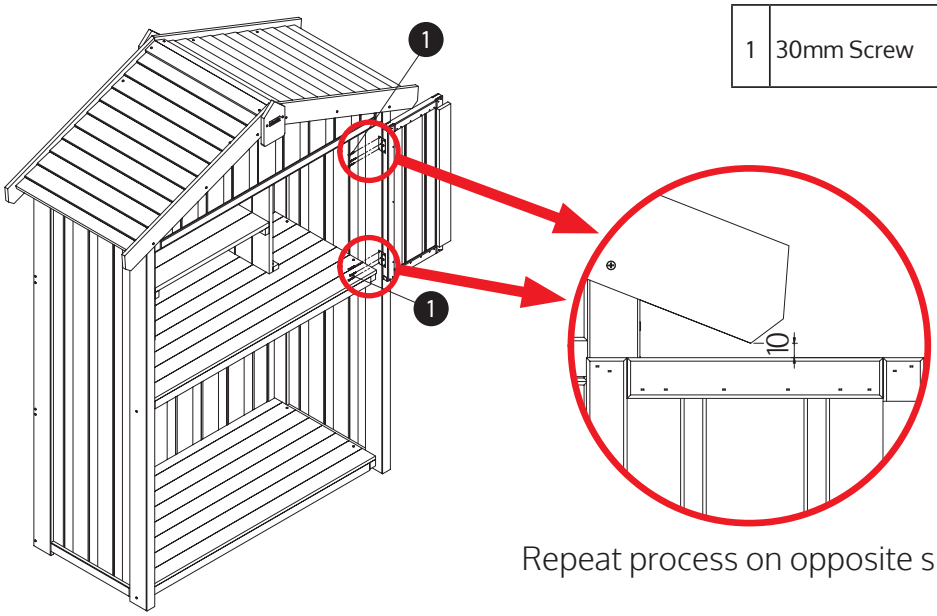

1	30mm Screw		x12

Repeat process on opposite side

20

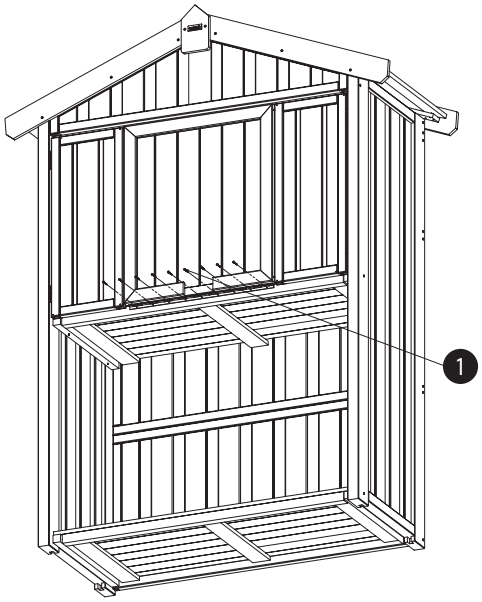

1	30mm Screw		x9

21

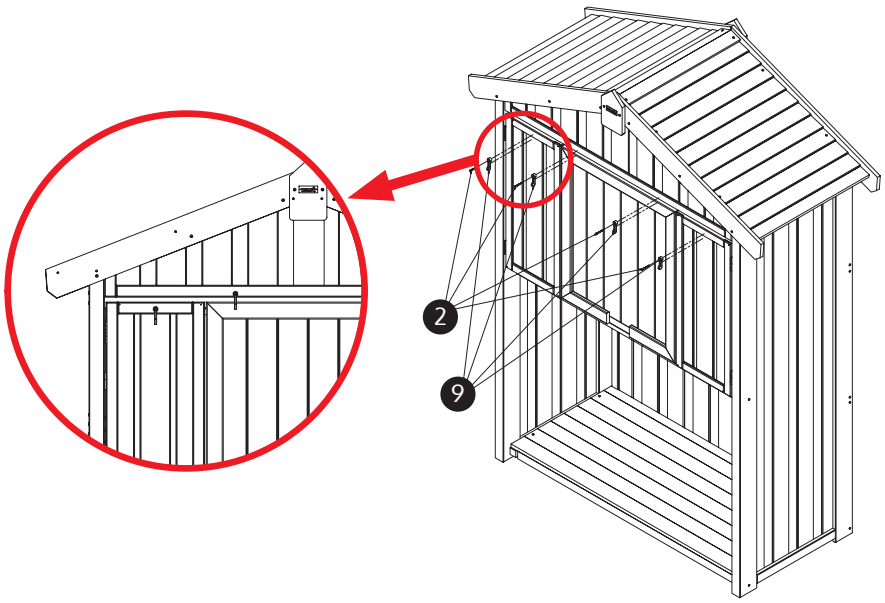

2	40mm Screw		x4
9	Plastic Lock		x4

22

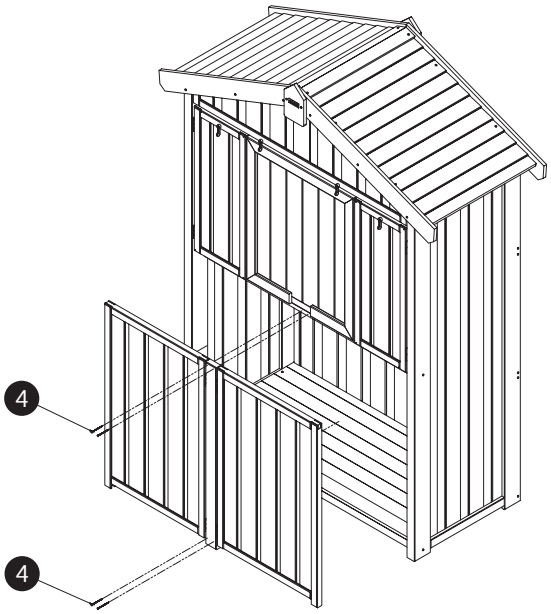

4	60mm Screw	x4

23

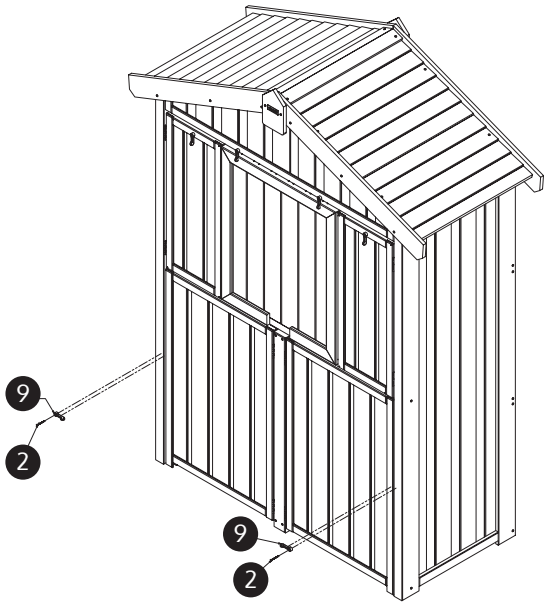

2	40mm Screw	x2
9	Plastic Lock	x2

Your Product is now complete.

OPERATION

NOTE: Periodically check and tighten screws on moving parts

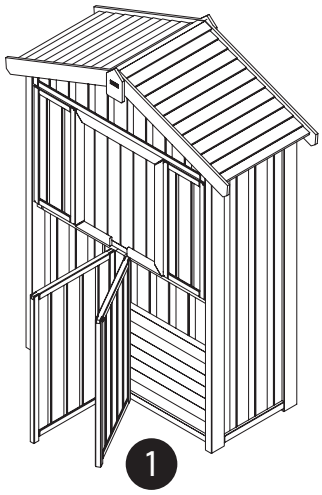

Open lower doors first

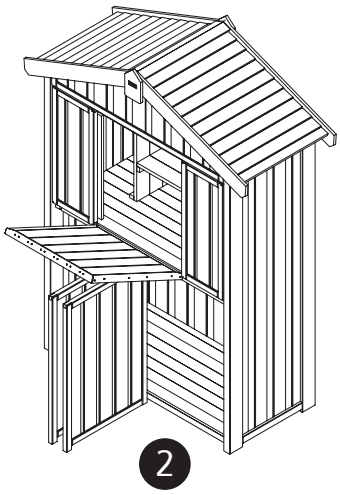

Fold down bar door

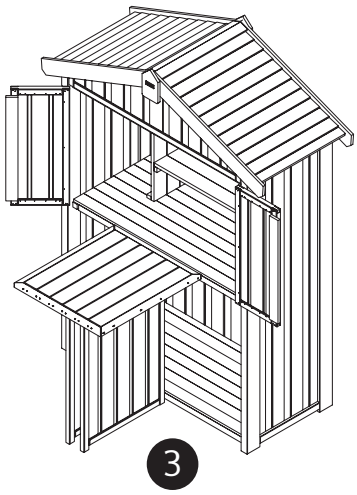

Fold back side doors and fix with clip

Cover available as optional extra at **www.zestoutdoorliving.co.uk** (Product number SKU:00371)