zest®

Assembly Instructions
Emily 2 Seater Bench

Code: 00009

V10 10 25

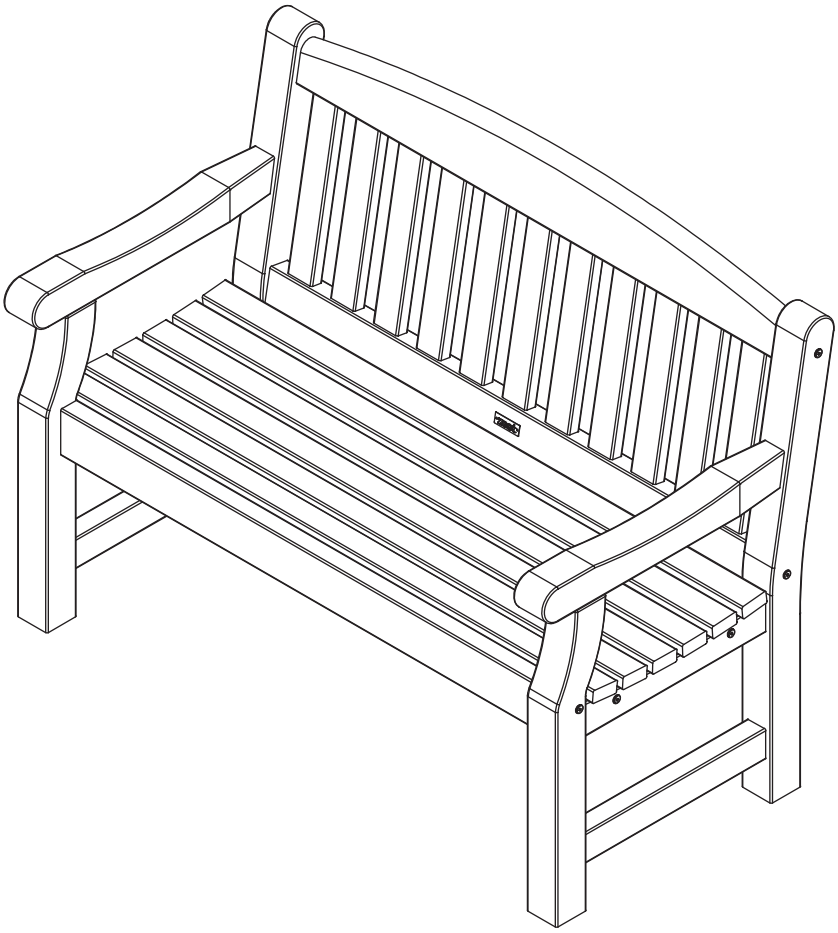

(W x D x H) 1.23m x 0.67m x 0.93m

ONLINE ASSEMBLY VIDEO AVAILABLE

Please scan the QR code or visit zestoutdoorliving.co.uk/assembly-search

PLEASE KEEP THESE INSTRUCTIONS

zest®

Outdoor Living - The Natural Choice

Your new timber product is made to last.

Crafted from sustainable, PEFC-certified European redwood, this product is treated for durability in order to last for many years. The natural knots and variations in the wood give it unique character, and while small cracks may appear as the product settles into its environment, this is completely normal and doesn't affect its strength.

Important Assembly notes

- **Wood is a natural material** – it expands, contracts, and may shift slightly with changes in humidity and temperature. As a result, some components might need gentle pressure or realignment during assembly.
- **Do not fully tighten all screws at the beginning**. First, position and loosely fasten all brackets in the correct order to allow the structure to "settle." Once all components are in place and aligned, you can proceed with final tightening.

Caring for Your Product

- This product has been **pressure treated** to protect the timber from rot and extend its lifespan. You may notice slight **'green spotting'** on the surface—this is caused by natural salts rising to the surface during treatment. It will fade over time, or you can gently sand it off if preferred.
- Variations in the timber's colour or shading are normal and part of its **natural character**. These will gradually even out and fade with exposure to sunlight.
- To maintain the quality and appearance of your product, apply a **water-repellent preservative** or **exterior wood paint** once a year. This helps protect against discoloration and keeps your product looking its best.
- Use soapy water and a stiff brush to remove any build-up of dirt. Ensure the wood is completely dry before applying any timber treatments.
- For tougher stains or to refresh the surface, lightly sand the wood with medium-grit sandpaper, then reapply a protective treatment.

Your product is treated to resist rot and decay, but mould can still form in damp conditions. To minimise this:

- If possible, store in a dry, sheltered area during winter or extended periods of non-use to protect from moisture, frost, and extreme weather.
- **Periodically inspect for signs of mould**. You can use a **mild soap and water solution** to scrub the surface and clean off visible mould.
- **Harsh chemicals should be avoided**, as they may strip away the protective treatment on the wood.

Note: Always lift your furniture when moving it to protect the legs and supports from damage

Advisory Notices

- Roofs are weather resistant and not guaranteed to be watertight unless otherwise stated, and are not weight bearing.
- Items with enclosed storage or cupboard space are weather resistant and are not watertight unless otherwise stated.
- Sanitise all catering surfaces prior to use.

PEFC
PEFC/16-37-1490

Ethically Sourced

Zest's slow grown European redwood is sourced from responsibly managed PEFC certified forests. This means forests are used in a way that maintains biodiversity, regeneration, and nature conservation. PEFC tracks certified timber from the forest to the final product giving complete confidence to the customer. **www.pefc.co.uk**

Essential Safety Information.

When Assembling:

- Wear Protective Gear
  Use gloves and other protective equipment (e.g., safety glasses) to avoid splinters and dust. If the product includes stainless steel or glass components, be mindful of any sharp edges.

- Follow Instructions
  Carefully adhere to the assembly guidelines, ensuring all nuts, bolts, and screws are fully tightened and secure by the end of construction. We recommend regularly checking the fixings to ensure they are tight and secure.

- Packaging Materials
  Keep all packaging (e.g., plastic wrap, staples, nails) and fittings away from children. Dispose of the packaging material responsibly to avoid choking or injury hazards.

- Ensure Stable Ground
  Assemble or place the product on level, stable ground to prevent tipping or collapse. Do not build or assemble the product in high winds.

- Finger Trap Hazards
  Keep hands and fingers clear of hinges, folding mechanisms, or any moving parts to avoid pinch injuries.

- Secure Gazebos and Structures
  Anchor or fix gazebos and similar large structures firmly to the ground or to supporting surfaces. This helps them withstand the windy conditions and prevents tipping.

When In Use:

- Proper Use
  Do not stand on products unless explicitly designed for that purpose. Refrain from modifying the product in ways not recommended by the manufacturer.

- Fire Safety
  If your product is intended for use near ovens, grills, or other heat-generating surfaces, follow all recommended safety distances and local fire regulations. Always ensure proper ventilation and exercise caution to avoid fire hazards or heat damage.

- Children's Safety
  Supervise children at all times. Do not allow them to climb on furniture or use gazebos/structures in unintended ways.

Thank you for choosing Zest – bringing you closer to nature

Emily 2 Seater Bench Assembly Instructions

Requires 2 Person assembly
Tools required: 10mm Spanner, Slotted (Flat Head) Screw Driver, 4mm Hex (Allen) Key

Please take a few moments to check all pack contents listed

Emily 2 Seater Bench Pack List			
Part Code	**Item**	**Description**	**Quantity**
52807	A	Seat Base	1
52803	B	Leg Assembly	2
20257	C	Back	1

Code - 52808	**Emily 2 Seater Bench Fixings List**	
Item	**Description**	**Quantity**
1	M5 x 120mm Hex Screw	2
2	M5 x 105mm Hex Bolt	4
3	M5 x 90mm Hex Bolt	4
4	M5 Washer	4
5	M5 Nut	4
6	M5 Cross Dowel	4

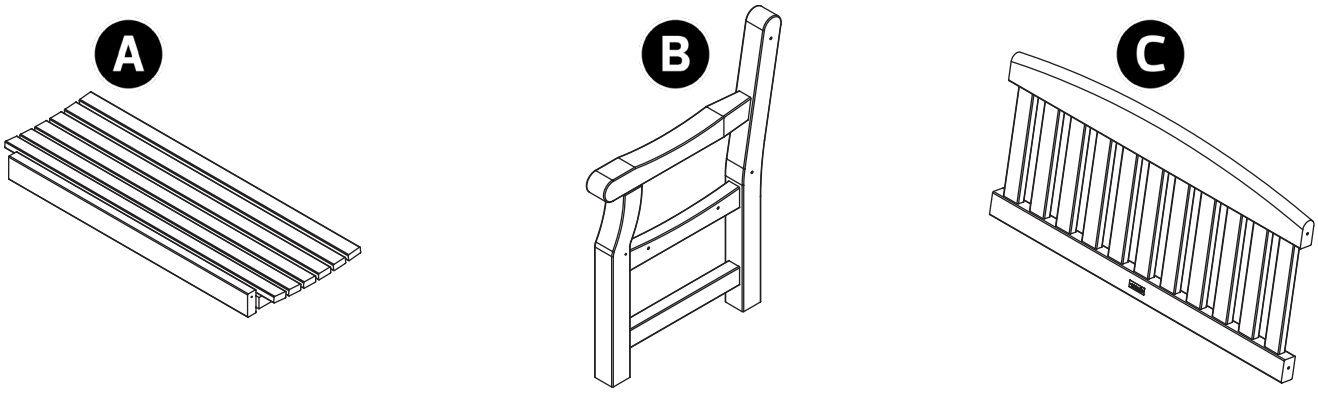

1. M5 x 120mm Hex Screw

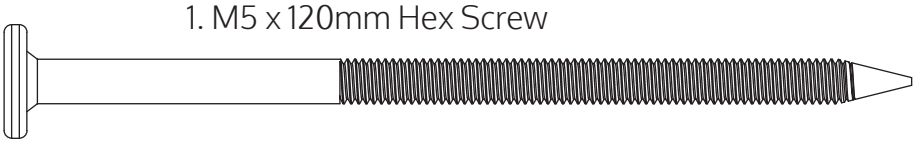

2. M5 x 105mm Hex Bolt

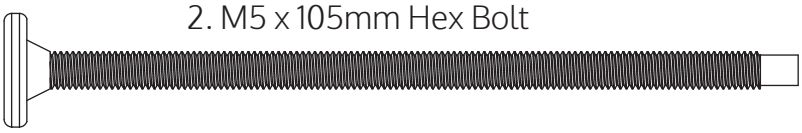

3. M5 x 90mm Hex Bolt

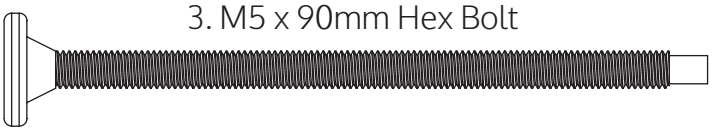

4. M5 Washer

5. M5 Nut

6. M5 Cross Dowel

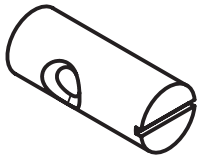

1

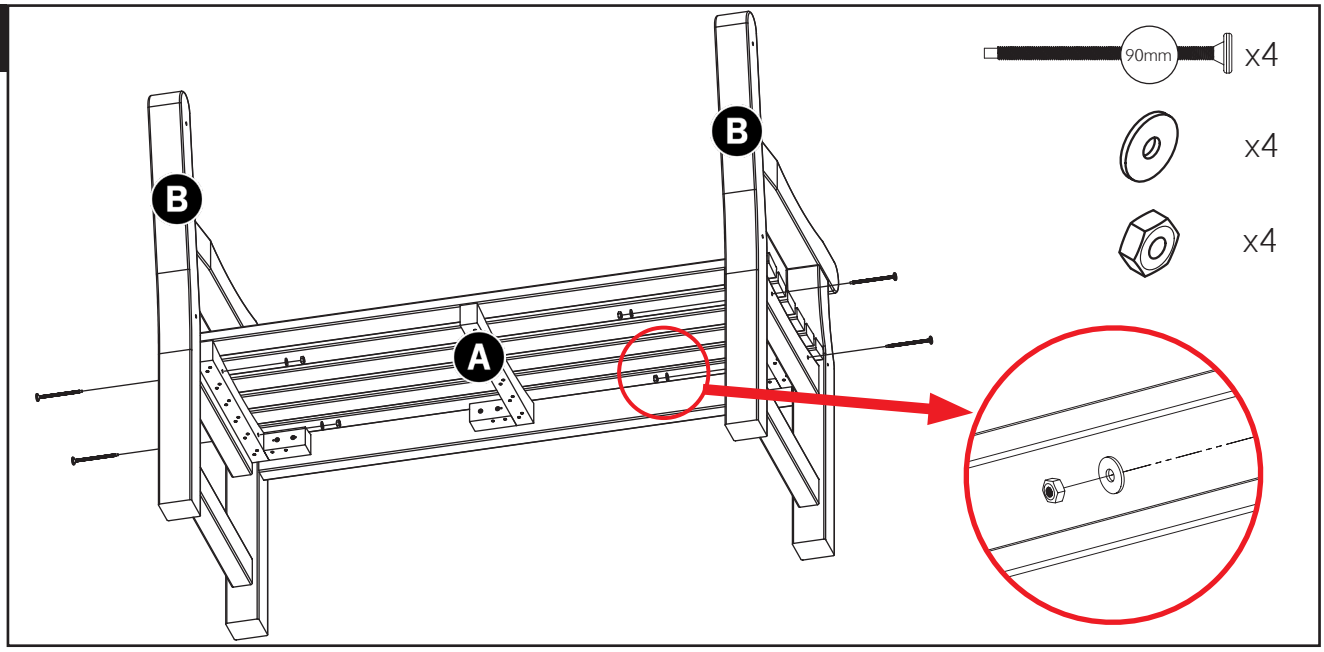

2

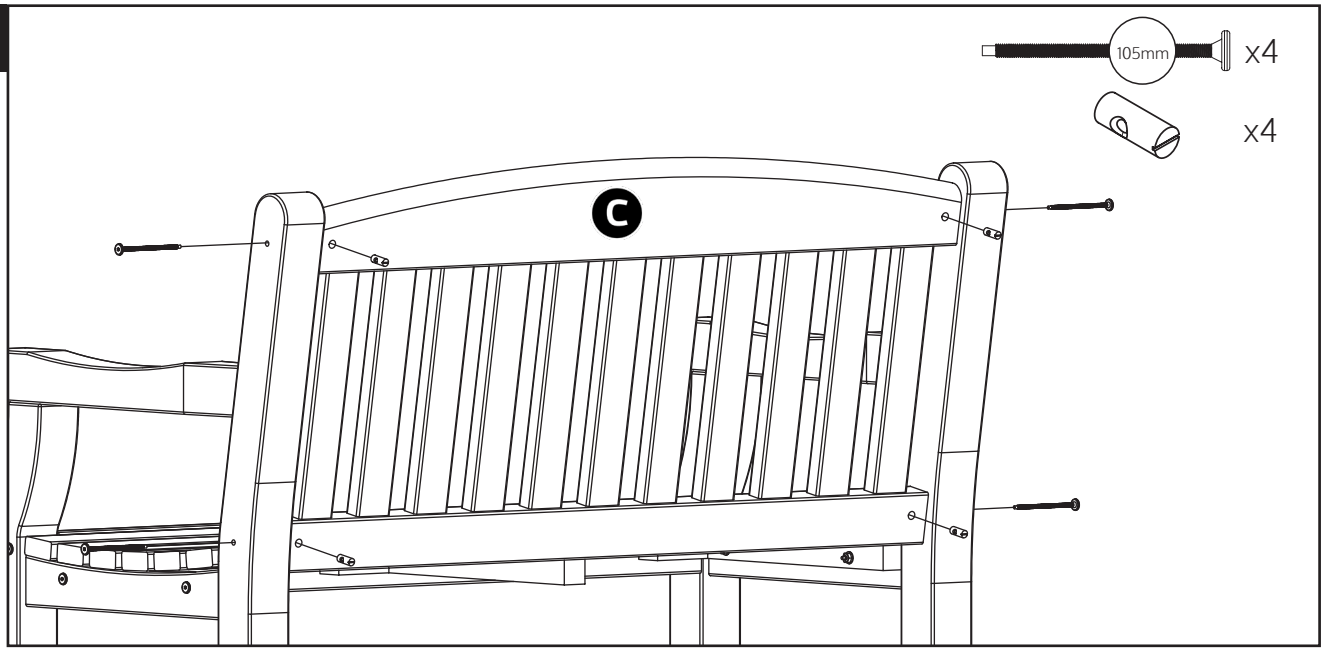

3

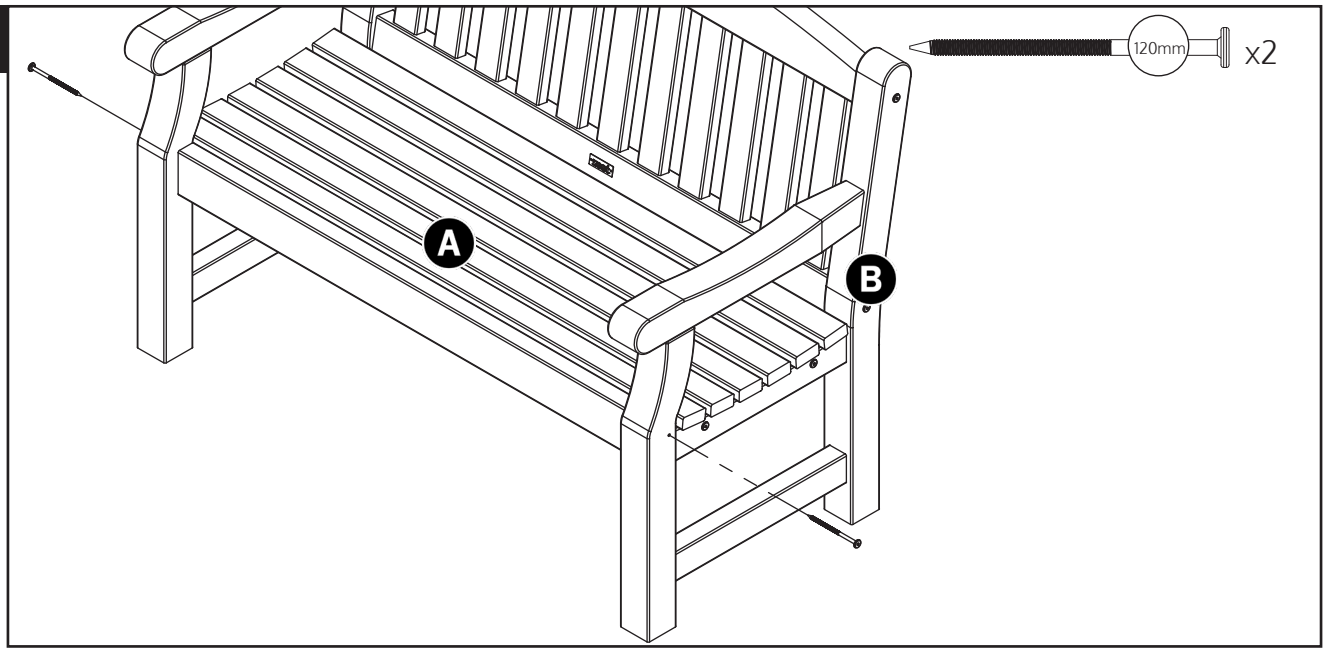

4

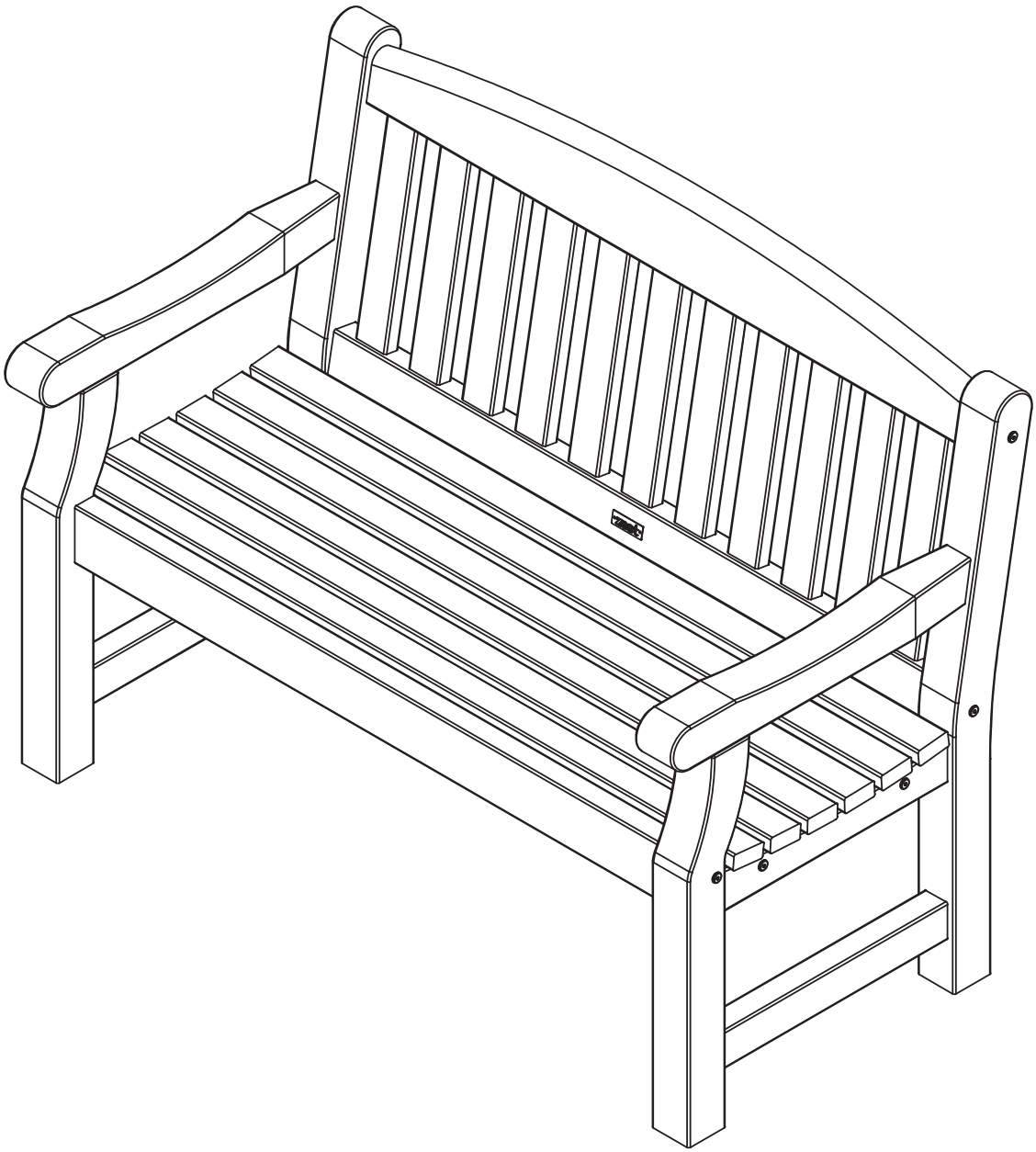

Your Emily 2 Seater Bench is now complete.