zest®

# Assembly Instructions
# Caroline Companion Seat (K)

Code: 46429

V1 11 24

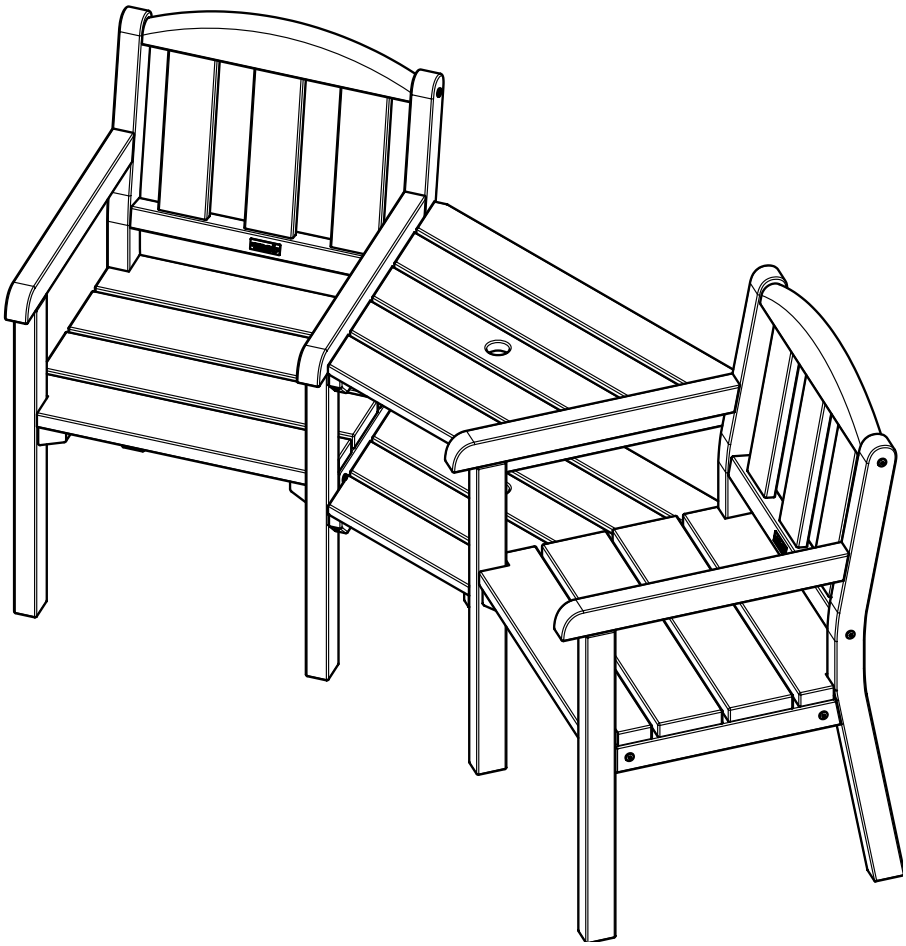

(W x D x H) 1.90m x 0.82m x 0.97m

**ONLINE ASSEMBLY VIDEO AVAILABLE**

Please scan the QR code or visit zestoutdoorliving.co.uk/assembly-search/

**PLEASE KEEP THESE INSTRUCTIONS**

# Every Zest product is unique because each piece of timber has its own distinctive, natural features

Zest is a leading timber specialist, designing and manufacturing award winning wooden garden products, crafted from natural slow-grown European redwood. Unlike man-made materials, timber is an entirely natural material, and each piece has its own distinctive qualities. So, owning a Zest timber product is like enjoying a unique slice of nature.

The benefits of slow grown timber:

> "Trees grow slowly in the cold climate of Eastern Europe producing stronger and close grained timber ideal for making quality outdoor products."

## Natural and Unique

There may be variations in the timber's colour or shading, but these will fade away over time when exposed to sunlight.

The changing seasons in each year of growth create characteristics unique to each tree - and to every piece of timber. Branches create an embedded mark in the tree trunk, resulting in a knot. Knots are a unique and natural feature which tells the story of the tree.

Owing to timber's natural moisture content, variations in temperature and humidity can cause expansion and contraction and may result in cracks and splits in any product made from natural timber. Any cracks and splits in the timber grain will alter with the changing seasons. They do not compromise the strength and durability of the product - they just add to its unique character.

Most Zest products are pressure treated which protects the timber from rot for many years. Pressure treatment can result in a small amount of 'green spotting' on the surface of new timber caused by natural salts leaving the wood. This will fade away over time.

**These visible changes are not a fault or a cause for concern and do not affect the structural integrity of the product. They are a result of how the timber matures and responds to its natural environment.**

## Ethically Sourced

Zest's slow grown European redwood is sourced from responsibly managed PEFC certified forests. This means forests are used in a way that maintains biodiversity, regeneration, and nature conservation. PEFC tracks certified timber from the forest to the final product giving complete confidence to the customer. **www.pefc.co.uk**

PEFC
PEFC/16-37-1490

## Replanting

Zest with its main supply partners is dedicated to replanting woodland and is collaborating on the nurture of wildlife habitats.

## Advisory Notices

- Roofs are weather resistant and not guaranteed to be watertight unless otherwise stated.
- Items with enclosed storage or cupboard space are weather resistant and are not watertight unless otherwise stated.
- Be aware of trap hazards if a Zest product has moving parts.
- All products should be positioned on solid, level ground
- Anchor down products where applicable using appropriate fixings.
- Roofs are not weight bearing
- Sanitise all catering surfaces prior to use.

# Caroline Companion Seat (K) Assembly Instructions

Requires 2 Person assembly
Tools required: M5 Allen Key (Provided) , Corded / Cordless Drill,
Pozi-drive Bit / Screwdriver
(All screw holes to be pre-drilled)

**Please take a few moments to check all pack contents listed**

| Caroline Companion Seat (K) Pack List | | | |
|---|---|---|---|
| **Part Code** | **Item** | **Description** | **Quantity** |
| 46430 | A | Seat Assembly | 2 |
| 46431 | B | Side Assembly | 4 |
| 46432 | C | Back Assembly | 2 |
| 46433 | D | Shelf Assembly | 2 |

| Code - 46434 | **Caroline Companion Seat (K) Fixings List** | |
|---|---|---|
| **Item** | **Description** | **Quantity** |
| 1 | M5 X 60mm Screws | 8 |
| 2 | M5 X 80mm Hex Screws | 8 |
| 3 | M5 X 100mm Hex Screws | 8 |
| 4 | M5 Allen Key | 1 |

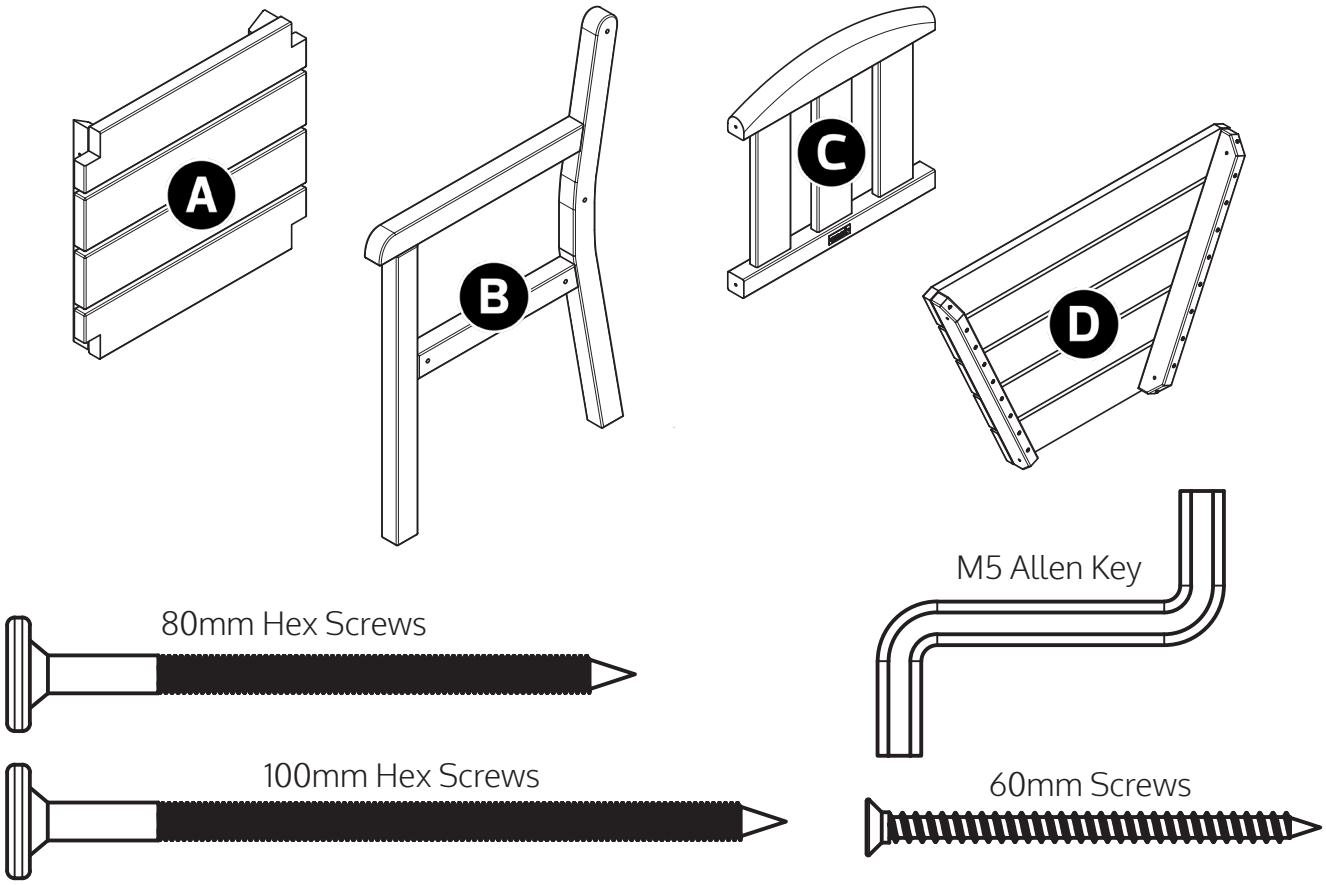


This product is made from pressure-treated timber. It should not be painted or coated with any other treatment until at least 6 months after purchase

**1**

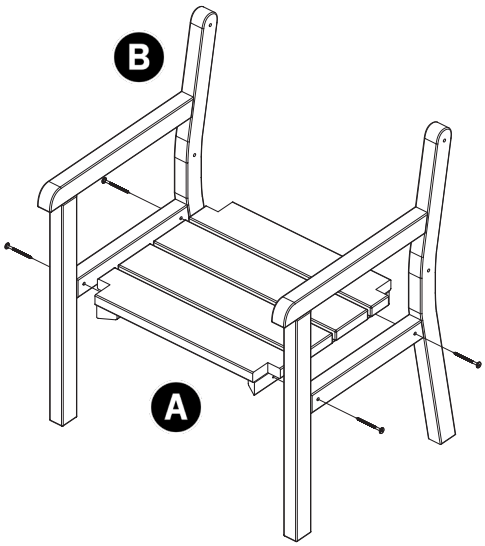

x4

Repeat for other seat

**2**

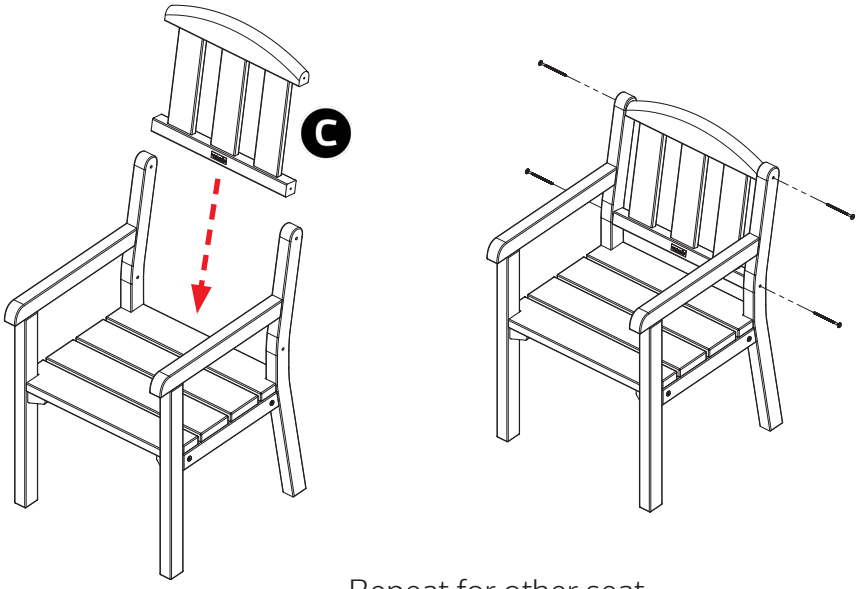


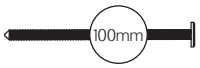


x4

Repeat for other seat

**3**

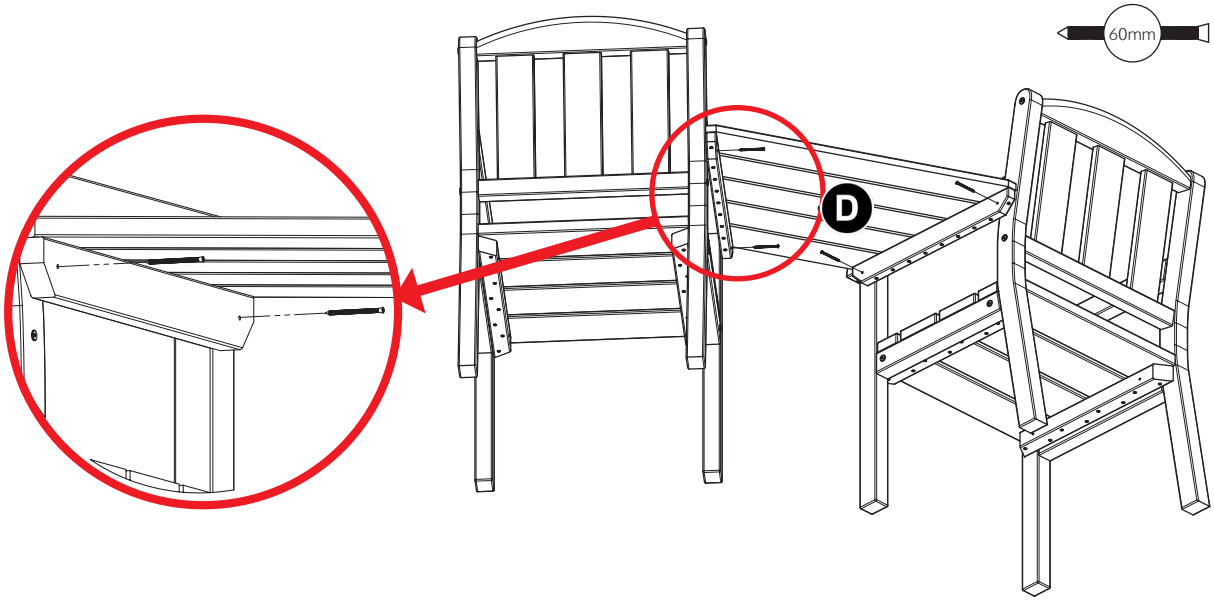

x4

**4**

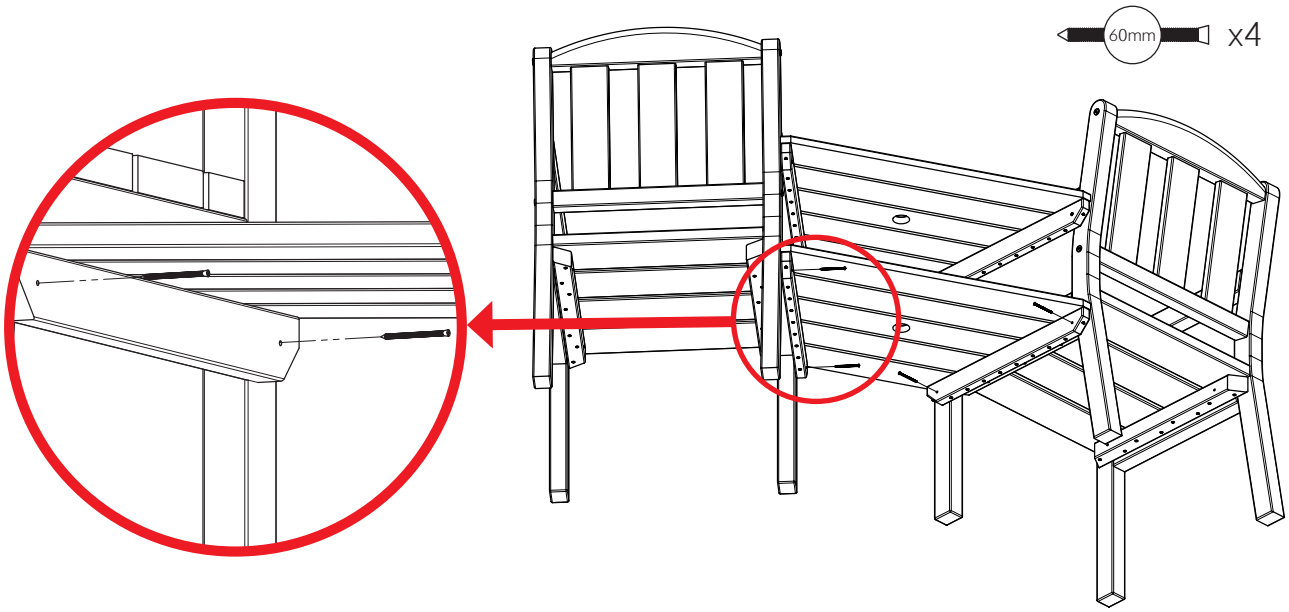


**5**

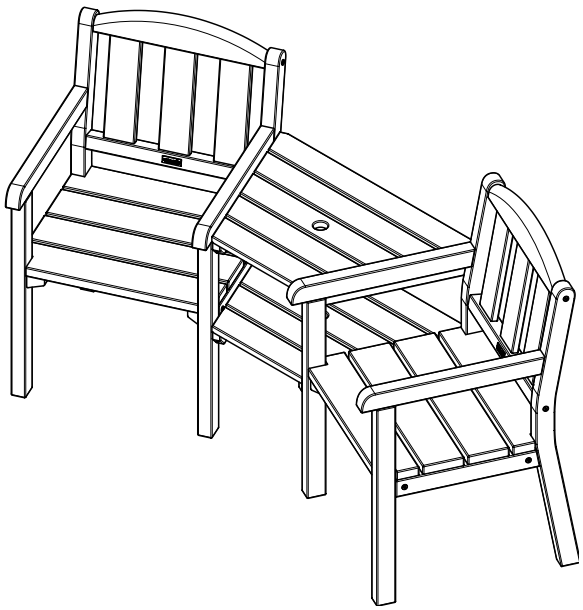

**Your Caroline Companion Seat (K) is now complete.**